Wireless solutions
for M2M world

HARDWARE DESCRIPTION

Wireless module iRZ MG21

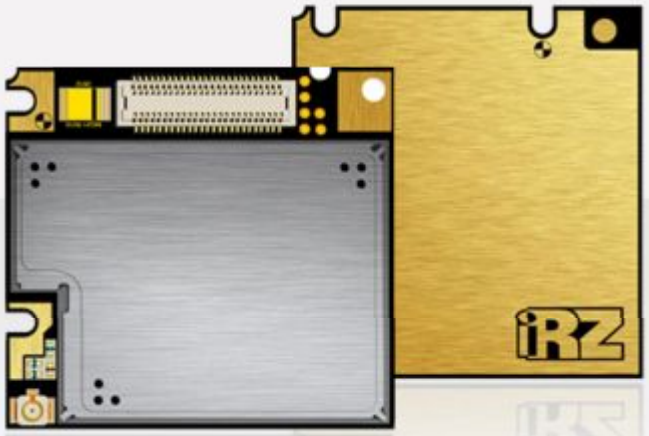

Table of contents

List of figures

List of tables

1. Introduction

This document[1] describes the hardware of the MG21 module that connects to the cellular device application and the air interface. It helps you quickly retrieve interface specifications, electrical and mechanical details and information on the requirements to be considered for integrating further components.

1.1. Terms and Abbreviations

Main abbreviations

Abbreviation	Description
ADC	Analog-to-Digital Converter
AFC	Automatic Frequency Control
AGC	Automatic Gain Control
ANSI	American National Standards Institute
ARFCN	Absolute Radio Frequency Channel Number
ARP	Antenna Reference Point
ASC0	Asynchronous Serial Controller. Abbreviations used for serial interface of MG21
ASIC	Application Specific Integrated Circuit
B	Thermistor Constant
B2B	Board-to-board connector
BER	Bit Error Rate
BTS	Base Transceiver Station
CB or CBM	Cell Broadcast Message
CE	Conformité Européene (European Conformity)
CHAP	Challenge Handshake Authentication Protocol
CPU	Central Processing Unit
CS	Coding Scheme
CSD	Circuit Switched Data
CTS	Clear to Send
DAC	Digital-to-Analog Converter
DAI	Digital Audio Interface
dBm0	Digital level, 3.14dBm0 corresponds to full scale, see ITU G.711, A-law
DCE	Data Communication Equipment (typically modems, e.g. GSM module)
DCS 1800	Digital Cellular System, also referred to as PCN
DRX	Discontinuous Reception
DSB	Development Support Box
DSP	Digital Signal Proc
DSR	Data Set Ready
DTE	Data Set ReadyData Terminal Equipment (typically computer, terminal, printer or, for example, GSM application)
DTR	Data Terminal Ready
DTX	Discontinuous Transmission
EFR	Enhanced Full Rate
EGSM	Enhanced GSM
EMC	Electromagnetic Compatibility
ESD	Electrostatic Discharge

Abbreviation	Description
ETS	European Telecommunication Standard
FDMA	Frequency Division Multiple Access
FR	Full Rate
GMSK	Gaussian Minimum Shift Keying
GPRS	General Packet Radio Service
GSM	Global Standard for Mobile Communications
HiZ	High Impedance
HR	Half Rate
I/O	Input/Output
IC	Integrated Circuit
IMEI	International Mobile Equipment Identity
ISO	International Standards Organization
ITU	International Telecommunications Union
kbps	kbits per second
LED	Light Emitting Diode
Li-Ion	Lithium-Ion
Mbps	Mbits per second
MMI	Man Machine Interface
MO	Mobile Originated
MS	Mobile Station (GSM module), also referred to as TE
MSISDN	Mobile Station International ISDN number
MT	Mobile Terminated
MTTF	Mean time to failure
NTC	Negative Temperature Coefficient
OEM	Original Equipment Manufacturer
PA	Power Amplifier
PAP	Password Authentication Protocol
PBCCH	Packet Switched Broadcast Control Channel
PCB	Printed Circuit Board
PCL	Power Control Level
PCM	Pulse Code Modulation
PCN	Personal Communications Network, also referred to as DCS 1800
PDU	Protocol Data Unit
PLL	Phase Locked Loop
PPP	Point-to-point protocol
PSU	Power Supply Unit
R&TTE	Radio and Telecommunication Terminal Equipment
RAM	Random Access Memory
RF	Radio Frequency
RMS	Root Mean Square (value)
ROM	Read-only Memory
RTC	Real Time Clock
Rx	Receive Direction
SAR	Specific Absorption Rate
SELV	Safety Extra Low Voltage

Abbreviation	Description
SIM	Subscriber Identification Module
SMS	Short Message Service
SRAM	Static Random Access Memory
TA	Terminal adapter (e.g. GSM module)
TDMA	Time Division Multiple Access
TE	Terminal Equipment, also referred to as DTE
Tx	Transmit Direction
UART	Universal asynchronous receiver-transmitter
URC	Unsolicited Result Code
USSD	Unstructured Supplementary Service Data
VSWR	Voltage Standing Wave Ratio

Phonebook abbreviations

Abbreviation	Description
FD	SIM fixdialing phonebook
LD	SIM last dialling phonebook (list of numbers most recently dialled)
MC	Mobile Equipment list of unanswered MT calls (missed calls)
ME	Mobile Equipment phonebook
ON	Own numbers (MSISDNs) stored on SIM or ME
RC	Mobile Equipment list of received calls
SM	SIM phonebook

2. Product Overview

2.1. MG21 Key Features at a Glance

Feature	Implementations
General	
Frequency bands	Quad band: GSM 850/900/1800/1900MHz
GSM class	Small MS
Output power (according to Release 99, V5)	Class 4 (+33dBm ±2dB) for GSM 850/ EGSM 900 Class 1 (+30dBm ±2dB) for GSM1800/1900
Power supply	**TBD**
Operating temperature (board temperature)	Normal operation: **TBD** Restricted operation: **TBD**
Physical	Dimensions: 32.5mm x 35mm x max. 3.1mm Weight: approx. 6g
RoHS	All hardware components fully compliant with EU RoHS Directive
GSM / GPRS features	
Data transfer	GPRS: ▪ Multislot Class 10 ▪ Full PBCCH support ▪ Mobile Station Class B ▪ Coding Scheme 1 – 4 CSD: ▪ V.110, RLP, non-transparent ▪ 2.4, 4.8, 9.6, 14.4kbps ▪ USSD PPP-stack for GPRS data transfer
SMS	Point-to-point MT and MO Cell broadcast Text and PDU mode Storage: SIM card plus 25 SMS locations in mobile equipment Transmission of SMS alternatively over CSD or GPRS. Preferred mode can be user defined.
Fax	Group 3; Class 2
Audio	Speech codecs: ▪ Half Rate (ETS 06.20) ▪ Full Rate (ETS 06.10) ▪ Enhanced Full Rate (ETS 06.50 / 06.60 / 06.80) ▪ Adaptive Multi Rate AMR Handsfree operation, echo cancellation, noise reduction, 7 different ringing tones / melodies

Feature	Implementations
Software	
AT commands	Hayes 3GPP TS 27.007, TS 27.005, iRZ Wireless Modules AT commands for RIL compatibility
SIM Application Toolkit	Supports SAT class 3, GSM 11.14 Release 99, support of letter class “c”
TCP/IP stack	Protocols: TCP, UDP, HTTP, FTP, SMTP, POP3 Access by AT commands
Firmware update	Windows executable for update over serial interface ASC0
Interfaces	
Serial interfaces	ASC0: ▪ 8-wire modem interface with status and control lines, unbalanced, asynchronous ▪ Fixed bit rates: **TBD** ▪ Autobauding: **TBD** ▪ Supports RTS0/CTS0 hardware handshake and software XON/XOFF flow control. ▪ Multiplex ability according to GSM 07.10 Multiplexer Protocol.
Audio	1 analog interface 1 digital interface (PCM)
SIM interface	Supported SIM cards: 3V, 1.8V External SIM card reader has to be connected via interface connector (note that card reader is not part of MG21)
Antenna	50Ω. External antenna can be connected via antenna connector or solderable pad.
Module interface	50-pin board-to-board connector
Power on/off, Reset	
Power on/off	Switch-on by hardware pin IGT Switch-off by AT command (AT^SMSO) Automatic switch-off in case of critical temperature and voltage conditions
Reset	Orderly shutdown and reset by AT command
Special features	
Real time clock	Timer functions via AT commands
Phonebook	SIM and phone
TTY/CTM support	Integrated CTM modem

2.2. MG21 System Overview

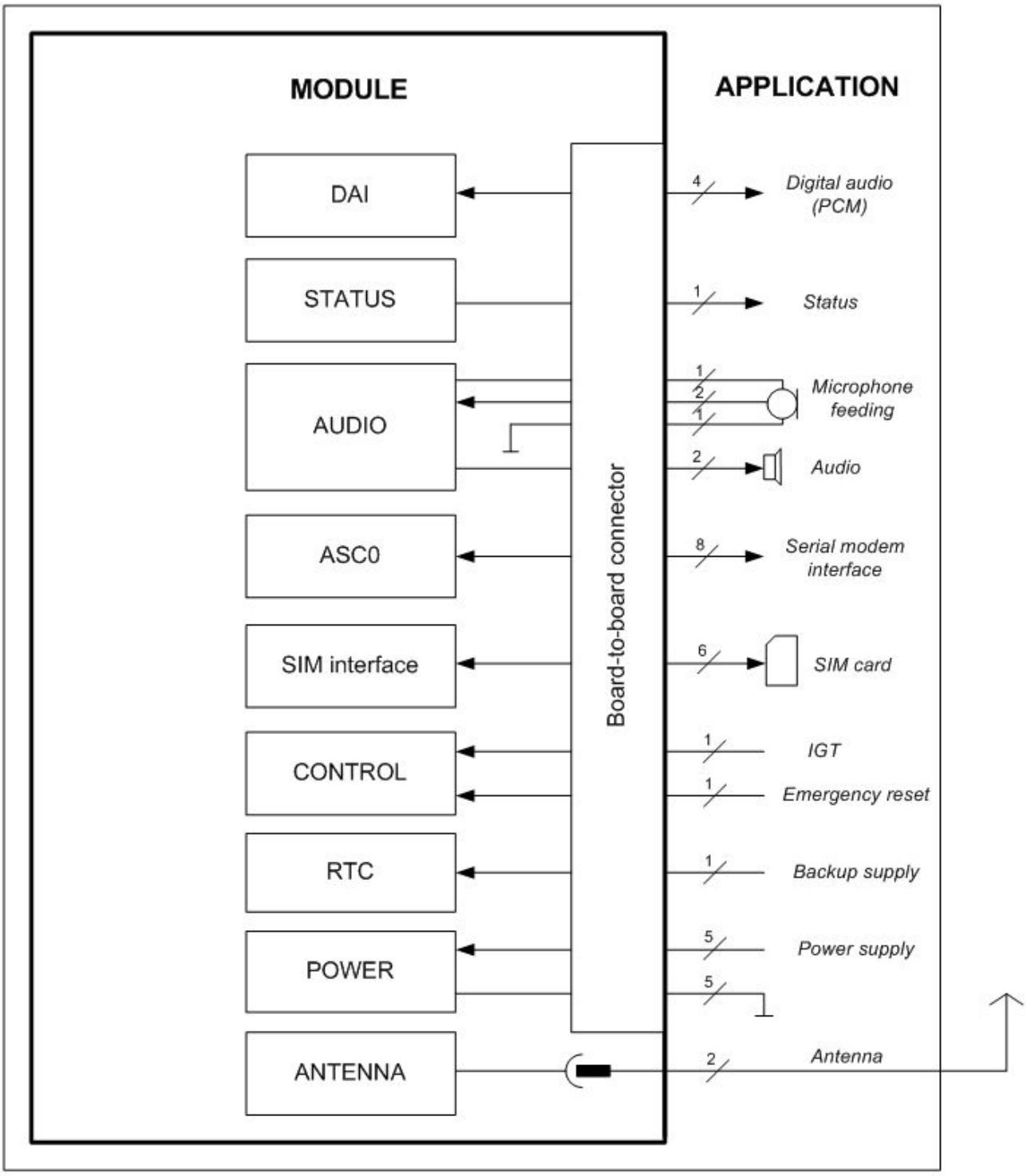

Figure 1: MG21 system overview

2.3. Circuit Concept

Figure 2 shows a block diagram of the MG21 module and illustrates the major functional components:

The baseband consists of the following parts:

- GSM baseband processor and power management
- Stacked flash / SRAM memory
- Application interface (50-pin board-to-board connector)

GSM RF block:

- RF transceiver (part of baseband connector)
- RF power amplifier / front-end module inc. harmonics filtering
- Receive SAW filters

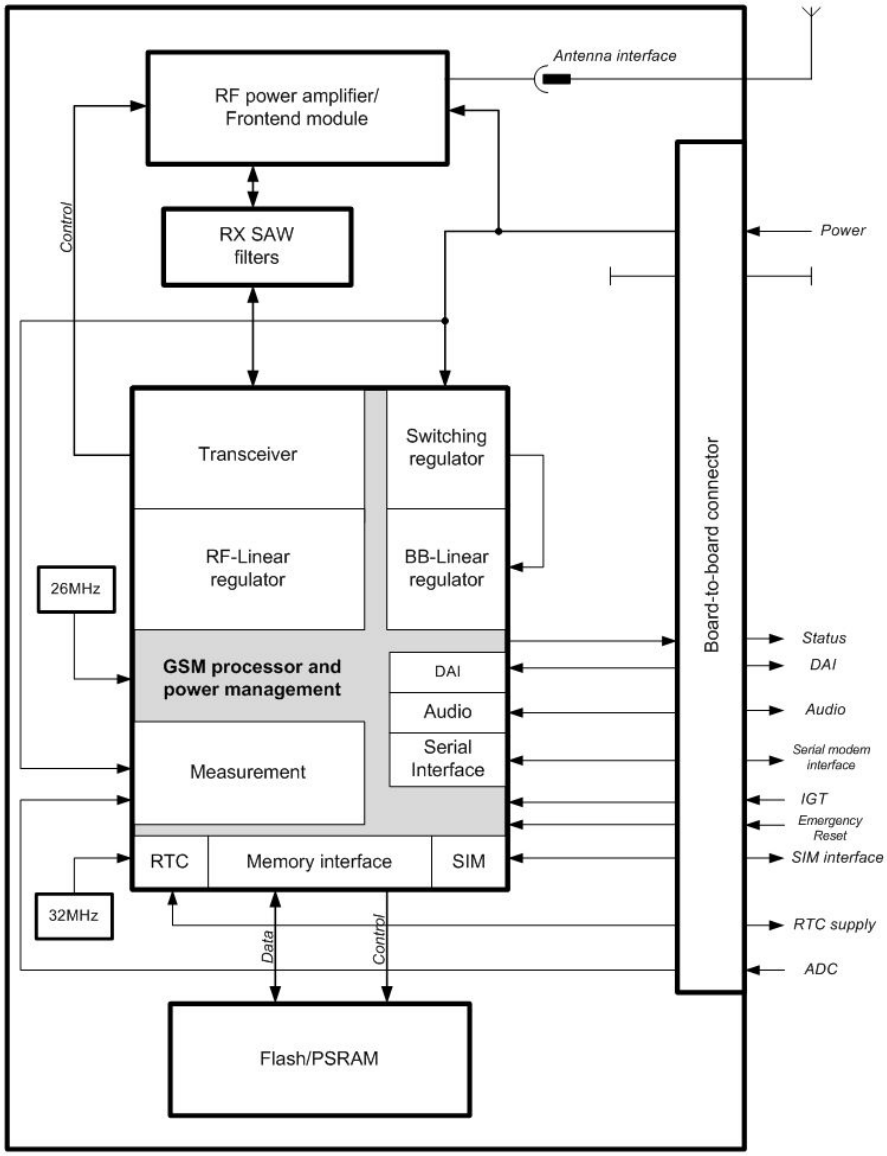

Figure 2: MG21 block diagram

2.4. Operating Modes

The table below briefly summarizes the various operating modes referred to in the following sections.

Table 1: Overview of operating modes

Mode	Function	
Normal operation	GSM / GPRS SLEEP	Various powersave modes set with AT+CFUN command. Software is active to minimum extent. If the module was registered to the GSM network in IDLE mode, it is registered and paging with the BTS in SLEEP mode, too. Power saving can be chosen at different levels: The NON-CYCLIC SLEEP mode (AT+CFUN=0) disables the AT interface. The CYCLIC SLEEP modes AT+CFUN= 7 and 9 alternatingly activate and deactivate the AT interfaces to allow permanent access to all AT commands.
	GSM IDLE	Software is active. Once registered to the GSM network, paging with BTS is carried out. The module is ready to send and receive.
	GSM TALK	Connection between two subscribers is in progress. Power consumption depends on network coverage individual settings, such as DTX off/on, FR/EFR/HR, hopping sequences, antenna.
	GPRS IDLE	Module is ready for GPRS data transfer, but no data is currently sent or received. Power consumption depends on network settings and GPRS configuration (e.g. multislot settings).
	GPRS DATA	GPRS data transfer in progress. Power consumption depends on network settings (e.g. power control level), uplink / downlink data rates and GPRS configuration (e.g. used multislot settings).
Power Down	Normal shutdown after sending the AT^SMSO command. Only a voltage regulator is active for powering the RTC. Software is not active. Interfaces are not accessible. Operating voltage (connected to BATT+) remains applied.	
Alarm mode	Restricted operation launched by RTC alert function while the module is in Power Down mode. Module will not be registered to GSM network. Limited number of AT commands is accessible.	

3. Energy Review

3.1. Power Supply

MG21 needs to be connected to a power supply at the board-to-board connector (5 pins each BATT+ and GND).

The power supply of MG21 has to be a single voltage source at BATT+. It must be able to provide the peak current during the uplink transmission.

All the key functions for supplying power to the device are handled by an ASIC power supply. The ASIC provides the following features:

- Stabilizes the supply voltages for the GSM baseband using low drop linear voltage regulators.
- Switches the module's power voltages for the power-up and -down procedures.
- Delivers, across the VDD pin, a regulated voltage for an external application. This voltage is not available in Power-down mode.
- SIM switch to provide SIM power supply.

3.1.1. Minimizing Power Losses (TBD)

When designing the power supply for your application please pay specific attention to power losses. Ensure that the input voltage VBATT+ never drops below 3.3V on the MG21 board, not even in a transmit burst where current consumption can rise. It should be noted that MG21 switches off when exceeding these limits. Any voltage drops that may occur in a transmit burst should not exceed 400mV.

The module switches off if the minimum supply voltage ($V_{BattMin}$) is reached.

Example:

$V_{BattLowLimit} = 3.3V$

$V_{DropMax} = 0.4V$

$V_{BattMin} = V_{BattLowLimit} + V_{DropMax}$

$V_{BattMin} = 3.3V + 0.4V = 3.7V$

The best approach to reducing voltage drops is to use a board-to-board connection as recommended, and a low impedance power source. The resistance of the power supply lines on the host board and of a battery pack should also be considered.

Note: If the application design requires an adapter cable between both board-to-board connectors, use a

cable as short as possible in order to minimize power losses.

If the length of the cable reaches the maximum length of 100mm, this connection may cause, for example, a resistance of 30mΩ in the BATT+ line and 30mΩ in the GND line. As a result, a 1.6A transmit burst would add up to a total voltage drop of 96mV. Plus, if a battery pack is involved, further losses may occur due to the resistance across the battery lines and the internal resistance of the battery including its protective circuit.

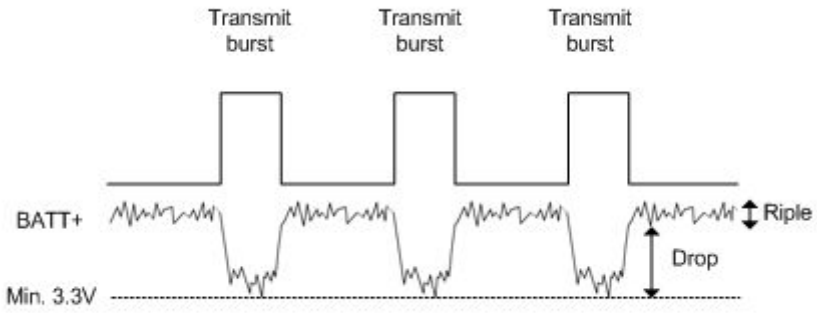

Figure 3: Power supply limits during transmit burst

3.1.2. Measuring the Supply Voltage (V_{BATT+})

Figure 4 shows reference test points for measuring the supply voltage VBATT+ on the module: TP BATT+ and TP GND. The test point for BATT+ is located above the board-to-board connector of the module. The test point for GND can be the module shielding.

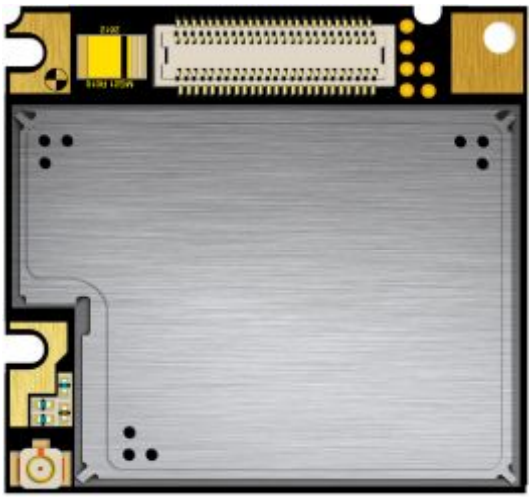

Figure 4: Position of the reference test points TP BATT+ and TP GND

3.1.3. Monitoring Power Supply

To help you monitor the supply voltage you can use the AT^SBV command which returns the voltage related to the test points TP BATT+ and TP GND.

The voltage is continuously measured at intervals depending on the operating mode on the RF interface. The duration of measuring ranges from 0.5s in TALK/DATA mode up to 50s when MG21 is in IDLE mode or Limited Service (deregistered). The displayed voltage (in mV) is averaged over the last measuring period before the AT^SBV command was executed.

3.2. Power Up / Power Down Scenarios

In general, be sure not to turn on MG21 while it is out of the operating range of voltage and temperature stated in Section 7.3 and Section 7.7. MG21 would immediately switch off after having started and detected these inappropriate conditions. In extreme cases this can cause permanent damage to the module.

3.2.1. Turn on MG21

MG21 can be started as described in the following sections:

- Hardware driven switch on by IGT line: Starts Normal mode.
- Wake-up from Power Down mode by using RTC interrupt: Starts Alarm mode.

3.2.1.1. Switch on MG21 using IGT Signal

When the operating voltage BATT+ is applied, MG21 can be switched on by means of the IGT signal.

If the operating voltage BATT+ is applied while the IGT signal is present, MG21 will be switched on automatically. Please note that if the rise time for the operating voltage BATT+ is longer than 12ms, the module startup will be delayed by about 1 second.

Please also note that if there is no IGT signal present right after applying BATT+, MG21 will instead of switching on perform a very short switch on/off sequence (approx. 120ms) that cannot be avoided.

The IGT signal is a low active signal and only allows the input voltage level of the VDDLP signal. The following Figure 5 shows an example for a switch-on circuit.

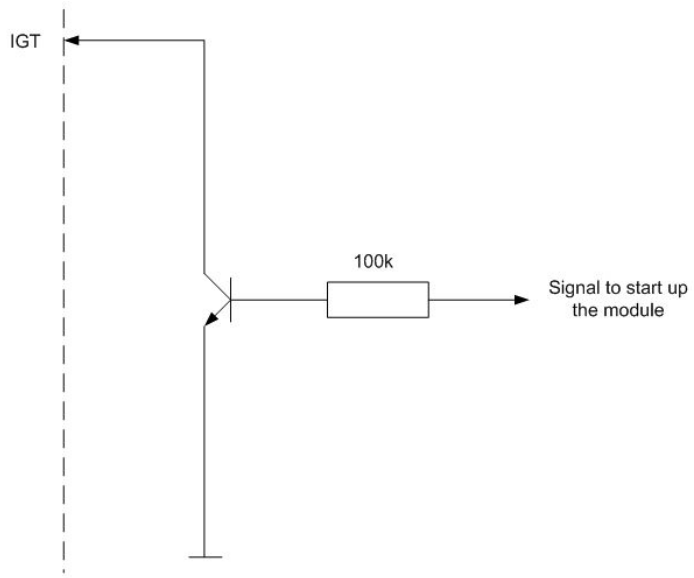

Figure 5: IGT circuit sample

Please also note that if the state of the IGT signal is coupled to the state of the VDDLP line or that if the IGT signal otherwise remains active low after switch on, it is no longer possible to switch off MG21 using the AT command AT^SMSO. Using this command will instead automatically restart the module.

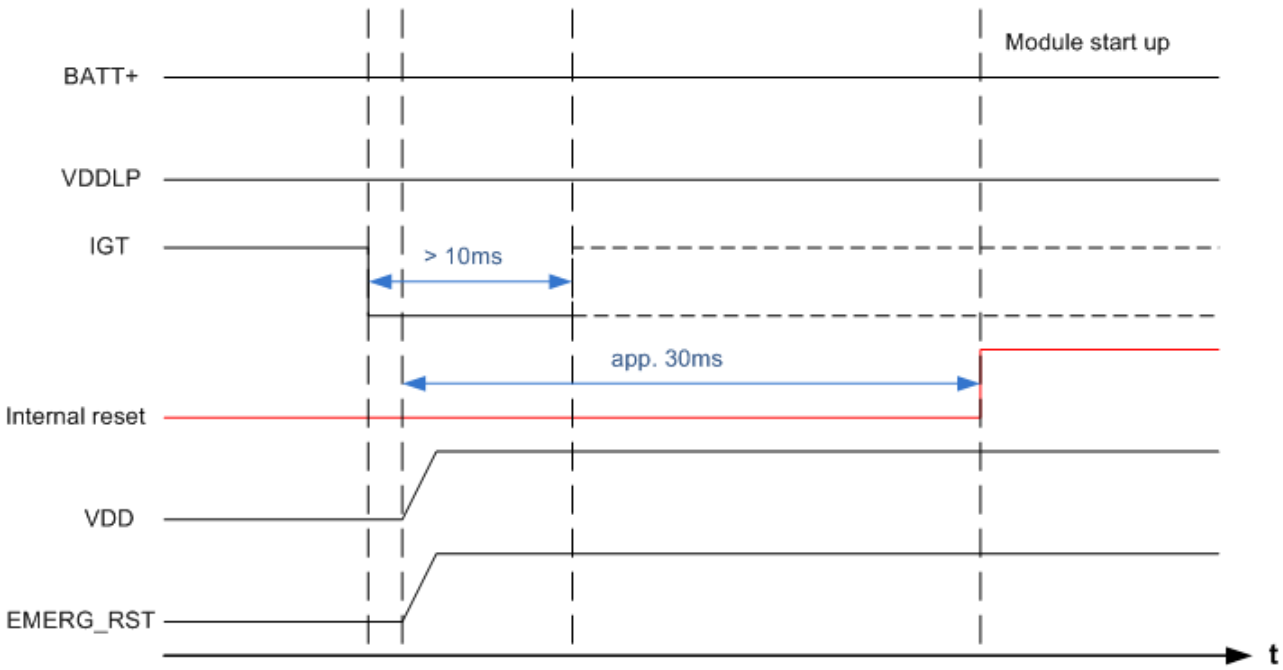

Figure 6: Power-on by ignition signal **(TBD)**

If configured to a fixed bit rate (AT+IPR≠0), the module will send the URC "^SYSSTART" which notifies the host application that the first AT command can be sent to the module. The duration until this URC is output varies with the SIM card and may take a couple of seconds, particularly if the request for the SIM PIN is deactivated on the SIM card.

Please note that no "^SYSSTART" URC will be generated if autobauding (AT+IPR=0) is enabled.

To allow the application to detect the ready state of the module we recommend using hardware flow control which can be set with AT\Q. The default setting is AT\Q0 (no flow control) which shall be altered to AT\Q3 (RTS/CTS handshake). If the application design does not integrate RTS/CTS lines the host application shall wait at least for the "^SYSSTART" URC. However, if the URC is not available (due to autobauding), you will simply have to wait for a period of time (at least 2 seconds) before assuming the module to be in ready state and before entering any data.

Please note that no data must be sent over the ASC0 interface before the interface is active and ready to receive data.

3.2.1.2. Turn on MG21 using the RTC (Alarm Mode)

Another power-on approach is to use the RTC, which is constantly supplied with power from a separate voltage regulator in the power supply ASIC. The RTC provides an alert function, which allows the MG21 to wake up whilst the internal voltage regulators are off. To prevent the module from unintentionally logging into the GSM network, this procedure only enables restricted operation, referred to as Alarm mode. It must not be confused with a wake-up or alarm call that can be activated by using the same AT command, but without switching off power.

Use the AT+CALA command to set the alarm time. The RTC retains the alarm time if MG21 was powered down by AT^SMSO. Once the alarm is timed out and executed, MG21 enters the Alarm mode. This is indicated by an Unsolicited Result Code (URC) which reads: ^SYSSTART ALARM MODE

Note that this URC is the only indication of the Alarm mode and will not appear when autobauding was activated (due to the missing synchronization between DTE and DCE upon start-up). Therefore, it is recommended to select a fixed baudrate before using the Alarm mode.

In Alarm mode the module is deregistered from the GSM network and only a limited number of AT commands is available. For a table showing the availability of AT commands depending on the module‘s operating mode please refer to.

For the module to change from Alarm mode to full operation (normal operating mode) it is possible to use the AT+CFUN command or to drive the ignition line to ground. The latter must be implemented in your host application.

If your host application uses the STATUS pin to control a status LED, please note that the LED is off while the GSM module is in Alarm mode.

3.2.2. Restart MG21

After startup MG21 can be re-started as described in the following sections:

- Software controlled reset by AT+CFUN command: Starts Normal mode.
- Hardware controlled reset by EMERG_RST line: Starts Normal mode

3.2.2.1. Restart MG21 via AT+CFUN Command

To reset and restart the MG21 module use the command AT+CFUN. You can enter the command AT+CFUN=0,1 or 1,1 or 7,1 or 9,1.

If configured to a fix baud rate (AT+IPR!=0), the module will send the URC "^SYSSTART" to notify that it is ready to operate. If autobauding is enabled (AT+IPR=0) there will be no notification. To register to the network SIM PIN authentication is necessary after restart.

3.2.2.2. Restart MG21 Using EMERG_RST

The EMERG_RST signal is internally connected to the central GSM processor. A low level for more than 10ms sets the processor and with it all the other signal pads to their respective reset state. The reset state is mentioned in Section 3.3 as well as in the figures showing the startup behavior of the serial interfaces.

After releasing the EMERG-RST line, i.e., with a change of the signal level from low to high, the module restarts. The other signals continue from their reset state as if the module was switched on by the ON signal.

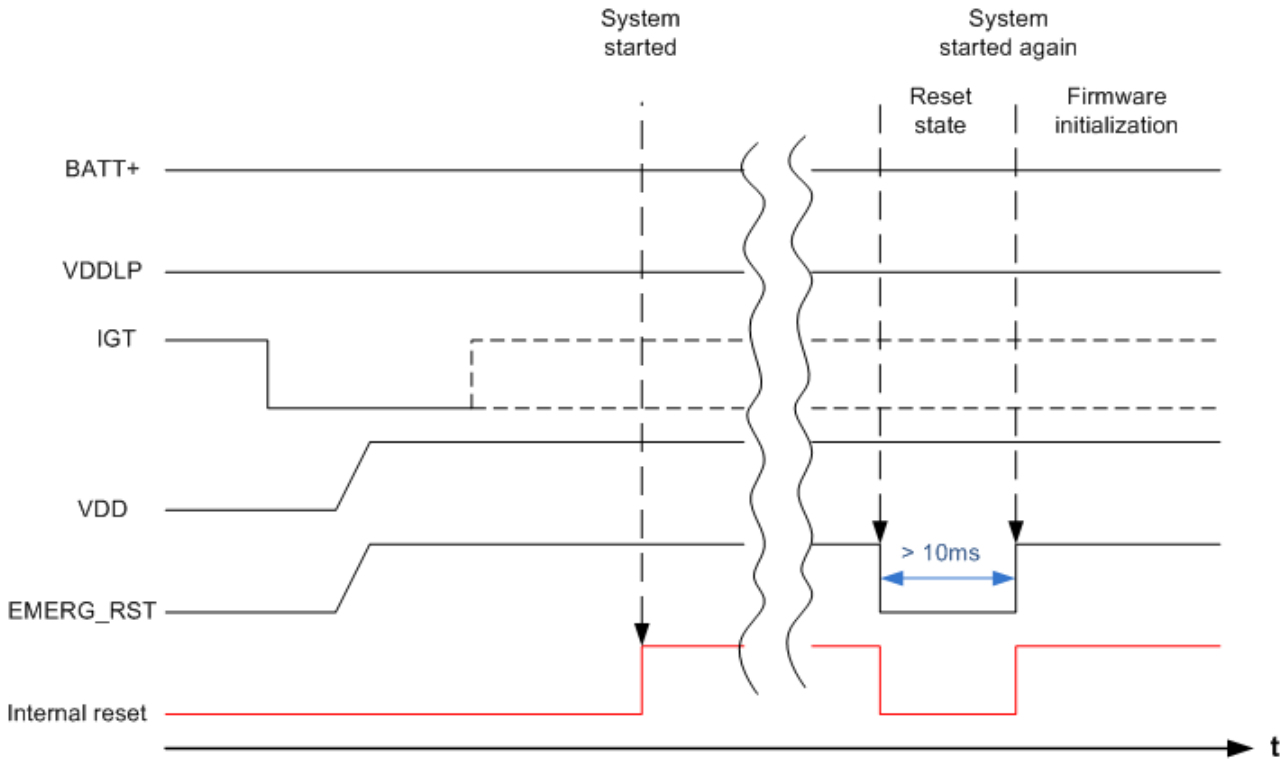

Figure 7: Emergency restart timing

It is recommended to control this EMERG_RST line with an open collector transistor or an open drain field-effect transistor. The following figure shows a sample for such a control circuit.

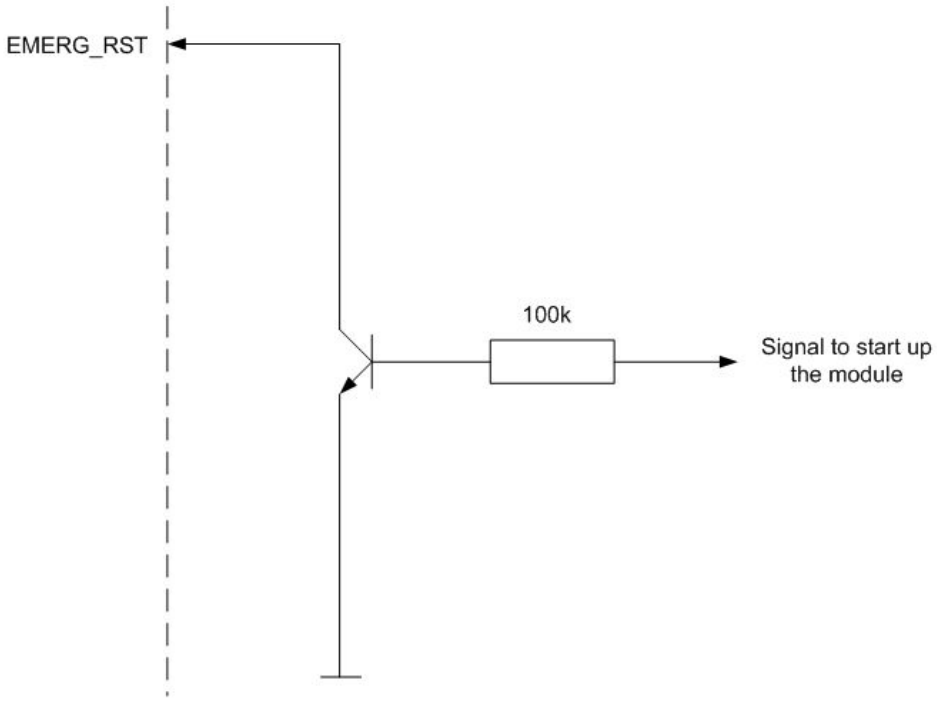

Figure 8: EMERG_RST circuit

Caution! Use the EMERG_RST line only when, due to serious problems, the software is not responding for more than 5 seconds. Pulling the EMERG_RST line causes the loss of all information stored in the volatile memory. Therefore, this procedure is intended only for use in case of emergency, e.g. if MG21 does not respond, if reset or shutdown via AT command fails.

3.3. Signal States after Startup

Table 2 lists states the interface signals pass through during reset and firmware initialization.

The reset state is reached with the rising edge of the EMERG_RST signal - either after a normal module startup or after a reset. After the reset state has been reached the firmware initialization state begins. The firmware initialization is completed as soon as the ASC0 interface lines CTS0, DSR0 and RING0 have turned low. Now, the module is ready to receive and transmit data.

Table 2: Signal states

Signal name	Reset state	Firmware initialization
CCIN	T / 100k PD	I / 100k PD
CCRST	L	O / L
CCIO	L	O / L
CCCLK	L	O / L
RXD0	T / 2 x PU_A	O / H
TXD0	T / 2 x PU_A	I
CTS0	PD_B	O / H
RTS0	T / 10k PU	I / 10k PU
RING0	T / 10k PU	O / H, 10k PU
DTR0	T / 10k PU	I / 10k PU
DCD0	T / 10k PU	O / H, 10k PU
DSR0	T / 5k PU	O / H, 5k PU
RXDDAI	T / PD_B	I / PD_B
SCLK	T / PD_B	O / H
TFSDAI	T / PD_B	O / L
TXDDAI	T / PD_B	O / L
RFSDAI	10k PD	10k PD
STATUS	T / 10k PU	O / H, 10k PU
Used abbreviations		
L = Low level H = High level L/H = Low or high level T = Tristate I = Input O = Output	OD = Open Drain PD_A = Pull down, 103µA at 1.75V PD_B = Pull down, 51µA at 1.75V PD_C = Pull down, 27µA at 1.75V PU_A = Pull up -102µA at 0.05V PU_B = Pull up -55µA at 0.05V PU_C = Pull up -31µA at 0.05V	

3.3.1. Turn off MG21

To switch the module off the following procedures may be used:

- Normal shutdown procedure: Software controlled by sending the AT^SMSO command over the serial application interface.
- Automatic shutdown:
  - Takes effect if under- or overvoltage is detected.
  - Takes effect if MG21 board temperature exceeds a critical limit.

3.3.1.1. Switch off MG21 using AT Command

The best and safest approach to powering down MG21 is to issue the AT^SMSO command. This procedure lets MG21 log off from the network and allows the software to enter into a secure state and safe data before disconnecting the power supply. The mode is referred to as Power Down mode. In this mode, only the RTC stays active.

Before switching off the device sends the following response:

^SMSO: MS OFF

OK

^SHUTDOWN

After sending AT^SMSO do not enter any other AT commands. There are two ways to verify when the module turns off:

- Wait for the URC "^SHUTDOWN". It indicates that data have been stored non-volatile and the module turns off in less than 1 second.
- Also, you can monitor the VDD pin. The low state of VDD definitely indicates that the module is switched off.

Be sure not to disconnect the operating voltage V_{BATT+} before the URC "^SHUTDOWN" has been issued and the VDD signal has gone low. Otherwise you run the risk of losing data.

While MG21 is in Power Down mode the application interface is switched off and must not be fed from any other source. Therefore, your application must be designed to avoid any current flow into any digital pins of the application interface.

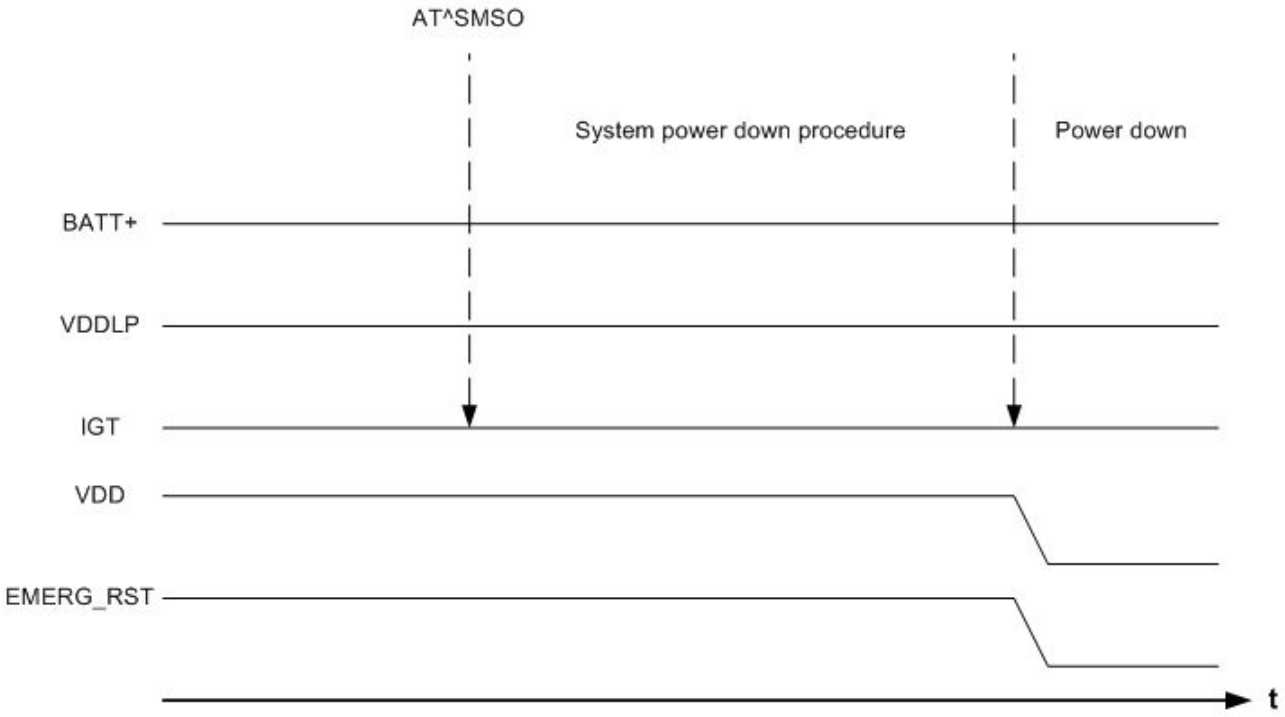

Figure 9: Switch off behavior

3.3.2. Automatic Shutdown

Automatic shutdown takes effect if

- the MG21 board exceeds the critical limits of overtemperature or undertemperature
- Undervoltage or overvoltage is detected

The automatic shutdown procedure is equivalent to the power-down initiated with the AT^SMSO command, i.e. MG21 logs off from the network and the software enters a secure state avoiding loss of data.

3.3.2.1. Thermal Shutdown (TBD)

The board temperature is constantly monitored by an internal NTC resistor located on the PCB. The values detected by either NTC resistor are measured directly on the board or the battery and therefore, are not fully identical with the ambient temperature.

Each time the board temperature goes out of range or back to normal, MG21 instantly displays an alert (if enabled).

- URCs indicating the level "1" or "-1" allow the user to take appropriate precautions, such as protecting the module from exposure to extreme conditions. The presentation of the URCs depends on the settings selected with the AT^SCTM write command: AT^SCTM=1: Presentation of URCs is always enabled. AT^SCTM=0 (default): Presentation of URCs is enabled during the 2 minute guard period after start-up of MG21. After expiry of the 2 minute guard period, the presentation will be disabled, i.e. no URCs with alert levels "1" or "-1" will be generated.
- URCs indicating the level "2" or "-2" are instantly followed by an orderly shutdown, except in cases described in Section 3.4.2.2. The presentation of these URCs is always enabled, i.e. they will be output even though the factory setting AT^SCTM=0 was never changed.

Table 3: Temperature dependent behavior

Sending temperature alert (2min after start-up, otherwise only if URC presentation enabled)	
^SCTM_B: 1	Board close to overtemperature limit.
^SCTM_B: -1	Board close to undertemperature limit.
^SCTM_B: 0	Board back to non-critical temperature range.
Automatic shutdown (URC appears no matter whether or not presentation was enabled)	
^SCTM_B: 2	Alert: Board equal or beyond overtemperature limit. MG21 switches off.
^SCTM_B: -2	Alert: Board equal or below undertemperature limit. MG21 switches off.

3.3.2.2. Deferred Shutdown at Extreme Temperature Conditions

In the following cases, automatic shutdown will be deferred if a critical temperature limit is exceeded:

- While an emergency call is in progress.
- During a two minute guard period after power-up. This guard period has been introduced in order to allow for the user to make an emergency call. The start of any one of these calls extends the guard period until the end of the call. Any other network activity may be terminated by shutdown upon expiry of the guard time.

While in a "deferred shutdown" situation, MG21 continues to measure the temperature and to deliver alert messages, but deactivates the shutdown functionality. Once the 2 minute guard period is expired or the call is terminated, full temperature control will be resumed. If the temperature is still out of range, MG21 switches off immediately (without another alert message).

Caution! Automatic shutdown is a safety feature intended to prevent damage to the module. Extended usage of the deferred shutdown facilities provided may result in damage to the module, and possibly other severe consequences.

3.3.2.3. Undervoltage Shutdown (TBD)

The undervoltage threshold is 100mV below the minimum supply voltage V_{BATT+} specified in Table 20. When the supply voltage approaches the undervoltage shutdown threshold the module will send the following URC:

^SBC: Undervoltage.

This alert is sent once. When the overvoltage shutdown threshold is exceeded the module will shut down cleanly.

This type of URC does not need to be activated by the user. It will be output automatically when fault conditions occur.

3.3.2.4. Overvoltage Shutdown (TBD)

The overvoltage shutdown threshold is 100mV above the maximum supply voltage V_{BATT+} specified in Table 20. When the supply voltage approaches the overvoltage shutdown threshold the module will send the following URC:

^SBC: Overvoltage.

This alert is sent once. When the overvoltage shutdown threshold is exceeded the module will shut down cleanly.

This type of URC does not need to be activated by the user. It will be output automatically when fault conditions occur.

Keep in mind that several MG21 components are directly linked to BATT+ and, therefore, the supply voltage remains applied at major parts of MG21. Especially the power amplifier is very sensitive to high voltage and might even be destroyed.

3.4. Power Saving (TBD)

SLEEP mode reduces the functionality of the MG21 module to a minimum and, thus, minimizes the current consumption to the lowest level. Settings can be made using the AT+CFUN command. For details see below. SLEEP mode falls into two categories:

- NON-CYCLIC SLEEP mode AT+CFUN=0
- CYCLIC SLEEP modes, selectable with AT+CFUN=7 or 9.

IMPORTANT: Please keep in mind that power saving works properly only when PIN authentication has been done. If you attempt to activate power saving while the SIM card is not inserted or the PIN not correctly entered (Limited Service), the selected <fun> level will be set, though power saving does not take effect. For the same reason, power saving cannot be used if MG21 operates in Alarm mode.

To check whether power saving is on, you can query the status of AT+CFUN if you have chosen CYCLIC SLEEP mode.

The wake-up procedures are quite different depending on the selected SLEEP mode. Table 4 compares the wake-up events that can occur in NON-CYCLIC and CYCLIC SLEEP modes.

3.4.1. No Power Saving (AT+CFUN=1)

The functionality level <fun>=1 is where power saving is switched off. This is the default after startup.

3.4.2. NON-CYCLIC SLEEP Mode (AT+CFUN=0)

If level 0 has been selected (AT+CFUN=0), the serial interface is blocked. The module shortly deactivates power saving to listen to a paging message sent from the base station and then immediately resumes power saving. Level 0 is called NON-CYCLIC SLEEP mode, since the serial interface is not alternatingly made accessible as in CYCLIC SLEEP mode.

The first wake-up event fully activates the module, enables the serial interface and terminates the power saving mode. In short, it takes MG21 back to the highest level of functionality <fun>=1.

In NON-CYCLIC mode, the falling edge the RTS0 lines wakes up the module to <fun>=1. To efficiently use this feature it is recommended to enable hardware flow control (RTS/CTS handshake) as in this case the CTS line notifies the application when the module is ready to send or receive characters.

3.4.3. CYCLIC SLEEP Mode (AT+CFUN=7)

The functionality level AT+CFUN=7 is referred to as CYCLIC SLEEP mode. The major benefit of all CYCLIC SLEEP modes is that the serial interface remains accessible, and that, in intermittent wake-up periods, characters can be sent or received without terminating the selected mode.

The CYCLIC SLEEP modes give you greater flexibility regarding the wake-up procedures: For example, in all CYCLIC SLEEP modes, you can enter AT+CFUN=1 to permanently wake up the module. In mode CFUN=7, MG21 automatically resumes power saving, after you have sent or received a short message, made a call or completed a GPRS transfer.

The CYCLIC SLEEP mode is a dynamic process which alternatingly enables and disables the serial interface. By setting/resetting the CTS signal, the module indicates to the application whether or not the UART is active. The timing of CTS is described below.

Both the application and the module must be configured to use hardware flow control (RTS/ CTS handshake). The default setting of MG21 is AT\Q0 (no flow control) which must be altered to AT\Q3.

Note: If both serial interfaces ASC0 are connected, both are synchronized. This means that SLEEP mode takes effect on both, no matter on which interface the AT command was issued. Although not explicitly stated, all explanations given in this section refer equally to ASC0, and accordingly to CTS0.

3.4.4. CYCLIC SLEEP Mode AT+CFUN=9

Mode AT+CFUN=9 is similar to AT+CFUN=7, but provides two additional features:

- The time the module stays active after RTS was asserted or after the last character was sent or received, can be configured individually using the command AT^SCFG. Default setting is 2 seconds like in AT+CFUN=7. The entire range is from 0.5 seconds to 1 hour, selectable in tenths of seconds.
- RTS0 are not only used for flow control (as in mode AT+CFUN=7), but also cause the module to wake up temporarily.

3.4.5. Timing of the CTS Signal in CYCLIC SLEEP Modes

The CTS signal is enabled in synchrony with the module's paging cycle. It goes active low each time when the module starts listening to a paging message block from the base station. The timing of the paging cycle varies with the base station. The duration of a paging interval can be calculated from the following formula:

*4.615 ms (TDMA frame duration) * 51 (number of frames) * DRX value.*

DRX (Discontinuous Reception) is a value from 2 to 9, resulting in paging intervals from 0.47 to 2.12 seconds. The DRX value of the base station is assigned by the network operator.

Each listening period causes the CTS signal to go active low: If DRX is 2, the CTS signal is activated every 0.47 seconds, if DRX is 3, the CTS signal is activated every 0.71 seconds and if DRX is 9, the CTS signal is activated every 2.1 seconds.

The CTS signal is active low for 4.6 ms. This is followed by another 4.6 ms UART activity. If the start bit of a received character is detected within these 9.2 ms, CTS will be activated and the proper reception of the character will be guaranteed. CTS will also be activated if any character is to be sent.

After the last character was sent or received the interface will remain active for

- another 2 seconds, if AT+CFUN=7
- or for an individual time defined with AT^SCFG, if AT+CFUN=9. Assertion of RTS has the same effect.

In the pauses between listening to paging messages, while CTS is high, the module resumes power saving and the AT interface is not accessible. See Figure 10 and Figure 11.

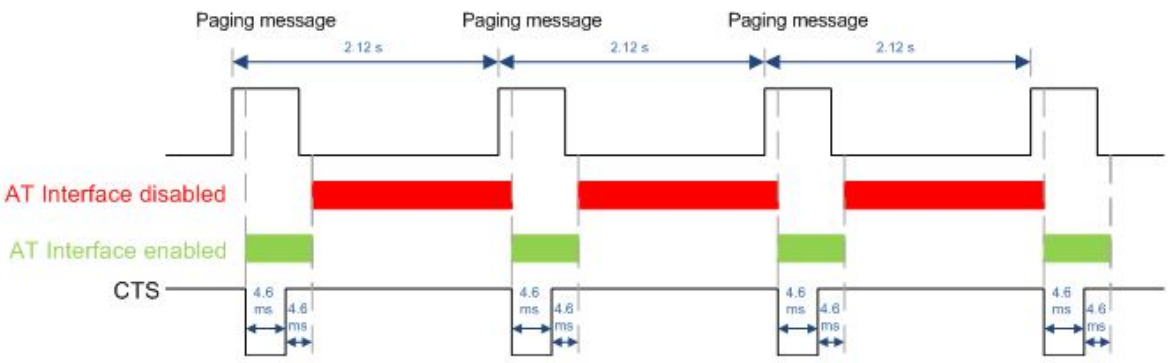

Figure 10: Timing of CTS signal (example for a 2.12 s paging cycle)

Figure 11 illustrates the CFUN=7 mode, which reset the CTS signal 2 seconds after the last character was sent or received.

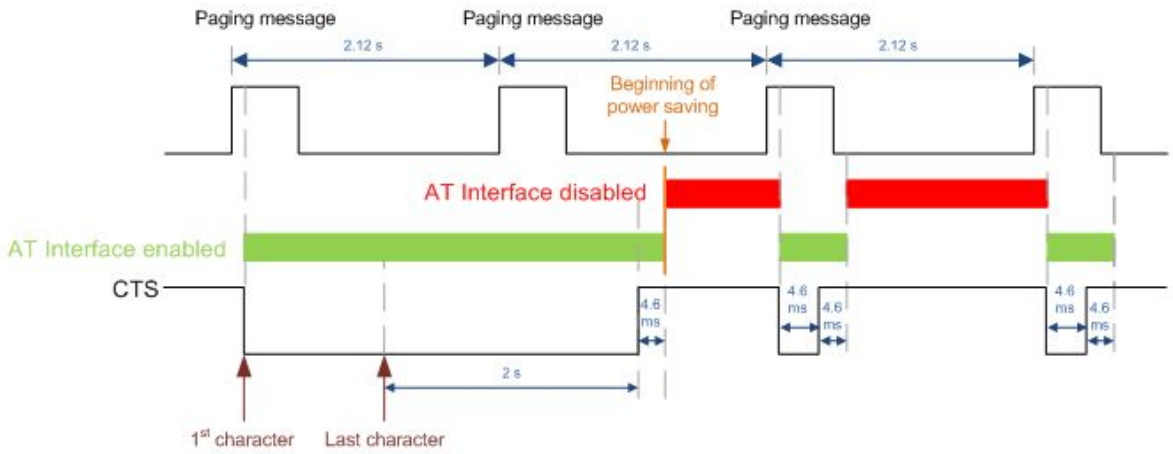

Figure 11: Beginning of power saving if CFUN=7

3.4.6. Wake up MG21 from SLEEP Mode

A wake-up event is any event that causes the module to draw current. Depending on the selected mode the wake-up event either switches SLEEP mode off and takes MG21 back to AT+CFUN=1, or activates MG21 temporarily without leaving the current SLEEP mode.

Definitions of the state transitions described in Table 4:

Quit	=	MG21 exits SLEEP mode and returns to AT+CFUN=1.
Temporary	=	MG21 becomes active temporarily for the duration of the event and the mode specific follow-up time after the last character was sent or received on the serial interface.
No effect	=	Event is not relevant in the selected SLEEP mode. MG21 does not wake up.

Table 4: Wake-up events in NON-CYCLIC and CYCLIC SLEEP modes

Event	**Selected mode AT+CFUN=0**	**Selected mode AT+CFUN=7 or 9**
Ignition line	No effect	No effect
RTS0 (falling edge)	Quit + flow control	Mode 7: No effect, RTS is only used for flow control Mode 9: Temporary + flow control
Unsolicited Result Code (URC)	Quit	Temporary
Incoming voice or data call	Quit	Temporary
Any AT command (incl. outgoing voice or data call, outgoing SMS)	Not possible (UART disabled)	Temporary
Incoming SMS depending on mode selected by AT+CNMI: AT+CNMI=0,0 (= default, no indication of received SMS) AT+CNMI=1,1 (= displays URC upon receipt of SMS)	 No effect Quit	 No effect Temporary
GPRS data transfer	Not possible (UART disabled)	Temporary
RTC alarm[1]	Quit	Temporary
AT+CFUN=1	Not possible (UART disabled)	Quit

[1] Recommendation: In NON-CYCLIC SLEEP mode, you can set an RTC alarm to wake up MG21 and return to full functionality. This is a useful approach because, in this mode, the AT interface is not accessible.

3.4.6.1. Wake-up via RTS0 (if AT+CFUN=0 or AT+CFUN=9)

During the CYCLIC SLEEP mode 7, the RTS0 lines are conventionally used for flow control: The assertion of RTS0 indicates that the application is ready to receive data - without waking up the module.

If the module is in CFUN=0 mode the assertion of RTS0 serves as a wake-up event, giving the application the possibility to intentionally terminate power saving. If the module is in CFUN=9 mode, the assertion of RTS0 can be used to temporarily wake up MG21 for the time specified with the AT^SCFG command (default = 2s). In both cases, if RTS0 is asserted while AT+CFUN=0 or AT+CFUN=9 is set, there may be a short delay until the module is able to receive data again. This delay depends on the current module activities (e.g. paging cycle) and may be up to 60ms. The ability to receive data is signalized by CTS0. It is therefore recommended to enable RTS/CTS flow control, not only in CYCLIC SLEEP mode, but also in NON-CYCLIC SLEEP mode.

4. Application Interface

MG21 is equipped with a 50-pin board-to-board connector that connects to the external application. The host interface incorporates several sub-interfaces described in the following sections:

- Power supply
- RTC backup
- SIM interface
- Serial interface ASC0
- Analog audio interface
- Digital audio interface (PCM)
- Status LED

4.1. Automatic GPRS Multislot Class Change

Temperature control is also effective for operation in GPRS Multislot Class 10. If the board temperature increases to the limit specified for restricted operation while data is transmitted over GPRS, the module automatically reverts from GPRS Multislot Class 10 (2Tx) to Class 8 (1Tx). This reduces the power consumption and, consequently, causes the board's temperature to decrease. Once the temperature drops to a value of 5 degrees below the limit of restricted operation, MG21 returns to the higher Multislot Class. If the temperature stays at the critical level or even continues to rise, MG21 will not switch back to the higher class.

After a transition from Multislot Class 10 to Multislot 8 a possible switchback to Multislot Class 10 is blocked for one minute.

Please note that there is not one single cause of switching over to a lower GPRS Multislot Class. Rather it is the result of an interaction of several factors, such as the board temperature that depends largely on the ambient temperature, the operating mode and the transmit power. Furthermore, take into account that there is a delay until the network proceeds to a lower or, accordingly, higher Multislot Class. The delay time is network dependent. In extreme cases, if it takes too much time for the network and the temperature cannot drop due to this delay, the module may even switch off.

4.2. Summary of State Transitions (except SLEEP Mode)

Further mode → → Present mode ↓	**Power Down**	**Normal mode**	**Alarm mode**
Power Down	---	IGT >10ms at low level	Wake-up from Power Down mode (if activated with AT+CALA)
Normal mode	AT^SMSO	EMERG_RST > 10ms	AT+CALA followed by AT^SMSO. MG21 enters Alarm mode when specified time is reached.
Alarm mode	AT^SMSO	AT+CFUN=x,1	---

4.3. Real Time Clock Supply

The internal Real Time Clock of MG21 is supplied from a separate voltage regulator in the power supply component which is also active when MG21 is in Power Down mode and BATT+ is available. An alarm function is provided that allows to wake up MG21 without logging on to the GSM network.

In addition, you can use the VDDLP pin on the board-to-board connector to backup the RTC from an external capacitor. The capacitor is charged from the internal LDO of MG21. If the voltage supply at BATT+ is disconnected the RTC can be powered by the capacitor. The size of the capacitor determines the duration of buffering when no voltage is applied to MG21, i.e. the greater the capacitor the longer MG21 will save the date and time. A serial 1kOhm resistor has to be placed on the application next to VDDLP. It limits the input current of an empty capacitor. The RTC can also be supplied from an external battery (rechargeable or nonchargeable). In this case the electrical specification of the VDDLP pin has to be taken in to account.

Figure 12 shows an RTC backup configuration.

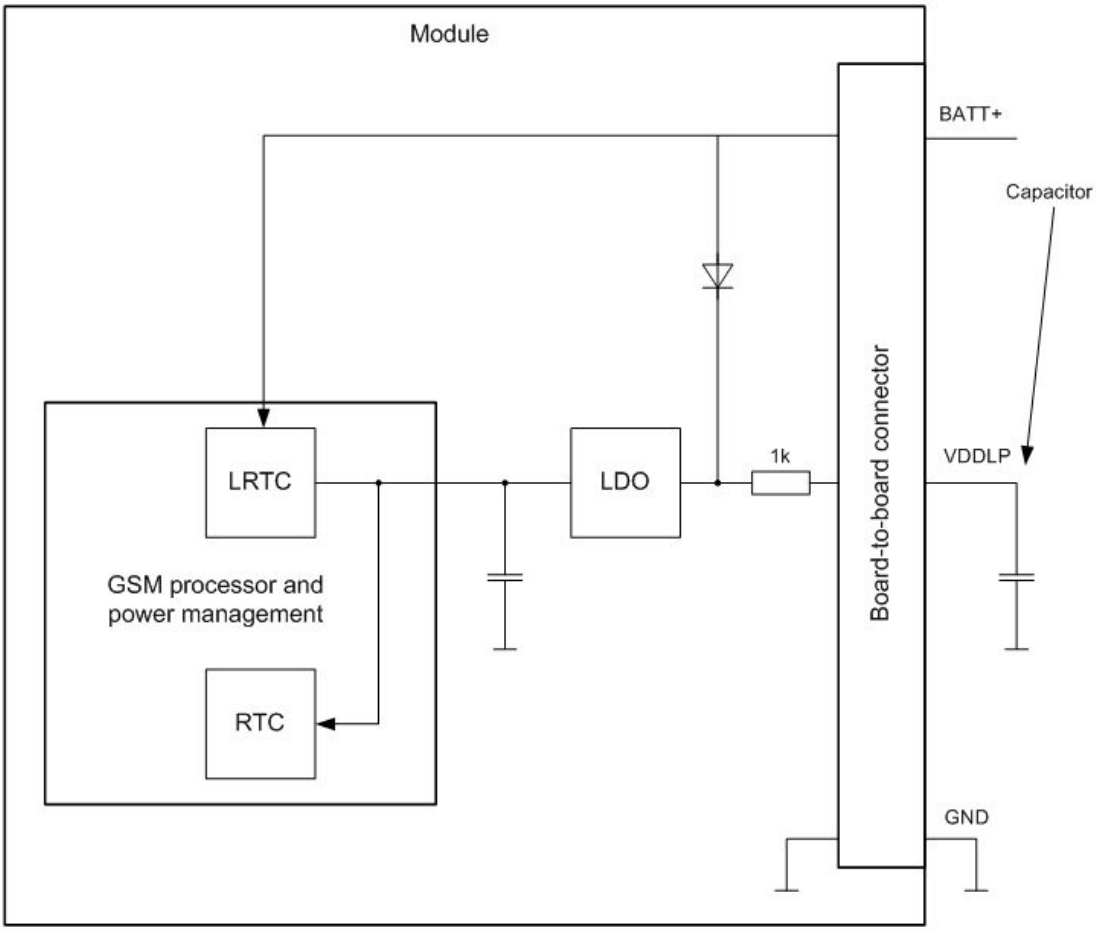

Figure 12: RTC supply variant

4.4. SIM Interface

The baseband processor has an integrated SIM card interface compatible with the ISO 7816 IC Card standard. This is wired to the host interface (board-to-board connector) in order to be connected to an external SIM card holder. Five pins on the board-to-board connector are reserved for the SIM interface. MG21 supports and automatically detects 3.0V as well as 1.8V SIM cards.

The CCIN pin serves to detect whether a tray is present in the card holder. Using the CCIN pin is mandatory for compliance with the 3GPP TS 11.11 (Rel.99) recommendation if the mechanical design of the host application allows the user to remove the SIM card during operation. The figure below shows a circuit to connect an external SIM card holder.

Table 5: Signals of the SIM interface (board-to-board connector)

Signal	Description
CCCLK	Chipcard clock, various clock rates can be set in the baseband processor.
CCVCC	SIM supply voltage from PSU-ASIC
CCIO	Serial data line, input and output.
CCRST	Chipcard reset, provided by baseband processor
CCIN	Input on the baseband processor for detecting a SIM card tray in the holder.The default level of CCIN is low (internal pull down resistor, no card inserted). It will change to high level when the card is inserted. To take advantage of this feature, an appropriate contact is required on the cardholder. Ensure that the cardholder on your application platform is wired to output a high signal when the SIM card is present. The CCIN pin is mandatory for applications that allow the user to remove the SIM card during operation. The CCIN pin is solely intended for use with a SIM card. It must not be used for any other purposes. Failure to comply with this requirement may invalidate the type approval of MG21.

The figure below shows a circuit to connect an external SIM card holder.

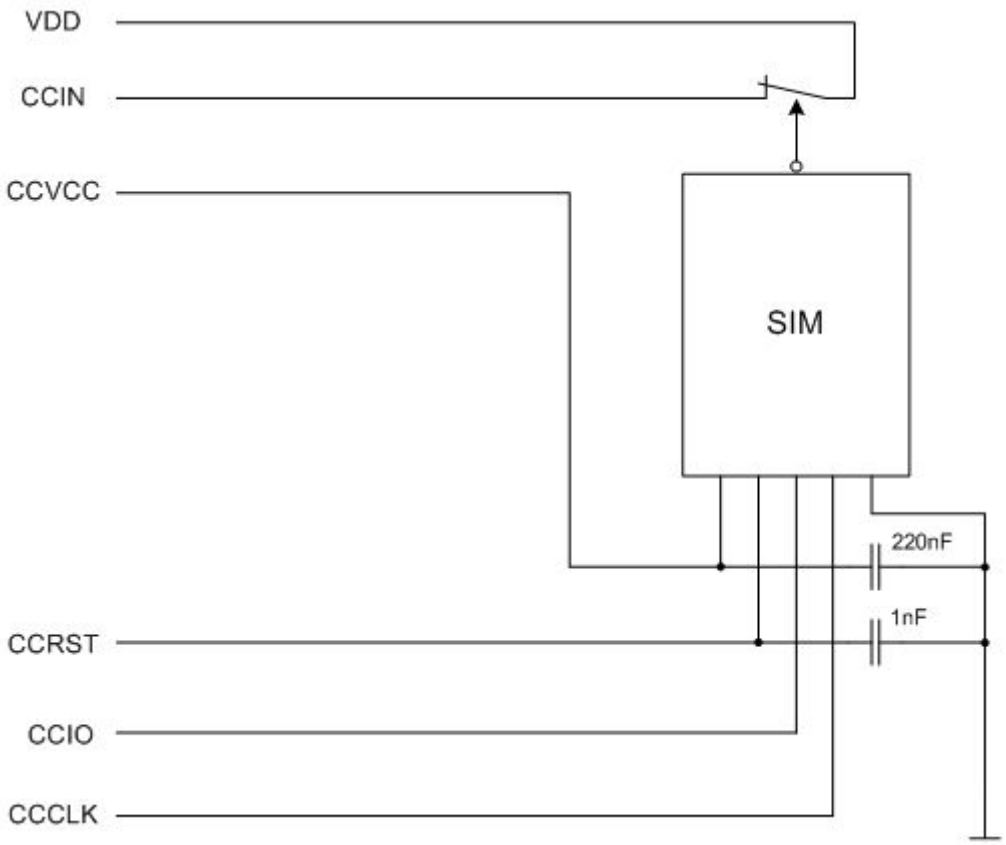

Figure 13: External SIM card holder circuit

It is recommended that the total cable length between the board-to-board connector pins on MG21 and the pins of the SIM card holder does not exceed 100mm in order to meet the specifications of 3GPP TS 51.010-1 and to satisfy the requirements of EMC compliance.

To avoid possible cross-talk from the CCCLK signal to the CCIO signal be careful that both lines are not placed closely next to each other. A useful approach would be to use a separate SIM card ground connection to shield the CCIO line from the CCCLK line. A GND line (pin 2) may be employed for such a case.

Note: No guarantee can be given, nor any liability accepted, if loss of data is encountered after removing the SIM card during operation. Also, no guarantee can be given for properly initialising any SIM card that the user inserts after having removed a SIM card during operation. In this case, the application must restart MG21.

If using a SIM card holder without detecting contact please be sure to switch off the module before removing the SIM Card or inserting a new one.

4.5. UART Interface

MG21 offers an 8-wire unbalanced, asynchronous modem interface ASC0 conforming to ITU-T V.24 protocol DCE signalling. The voltage level of the ASC0 interface is configured to 2.85V.

MG21 is designed for use as a DCE. Based on the conventions for DCE-DTE connections it communicates with the customer application (DTE) using the following signals:

- Port TXD @ application sends data to the module's TXD0 signal line
- Port RXD @ application receives data from the module's RXD0 signal line

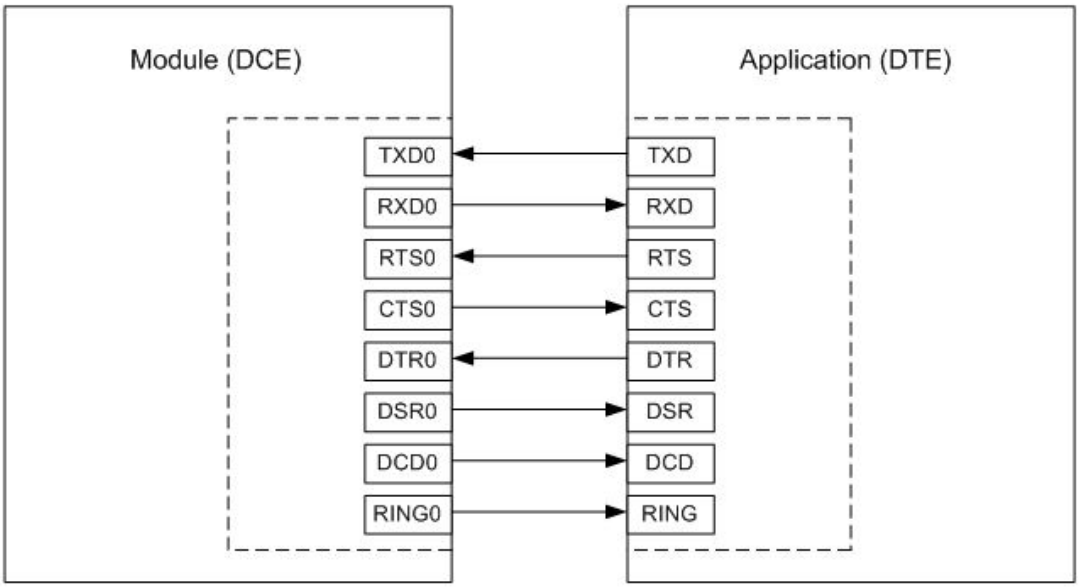

Figure 14: Serial interface ASC0

Features:

- Includes the data lines TXD0 and RXD0, the status lines RTS0 and CTS0 and, in addition, the modem control lines DTR0, DSR0, DCD0 and RING0.
- ASC0 is primarily designed for controlling voice calls, transferring CSD, fax and GPRS data and for controlling the GSM module with AT commands.
- The DTR0 signal will only be polled once per second from the internal firmware of MG21.
- The RING0 signal serves to indicate incoming calls and other types of URCs (Unsolicited Result Code). It can also be used to send pulses to the host application, for example to wake up the application from power saving state.
- Configured for 8 data bits, no parity and 1 stop bit.
- ASC0 can be operated at fixed bit rates from 300 bps to 230400 bps.(TBD)
- Autobauding supports bit rates from 1200 to 230400 bps.(TBD)
- Supports RTS0/CTS0 hardware flow control and XON/XOFF software flow control.

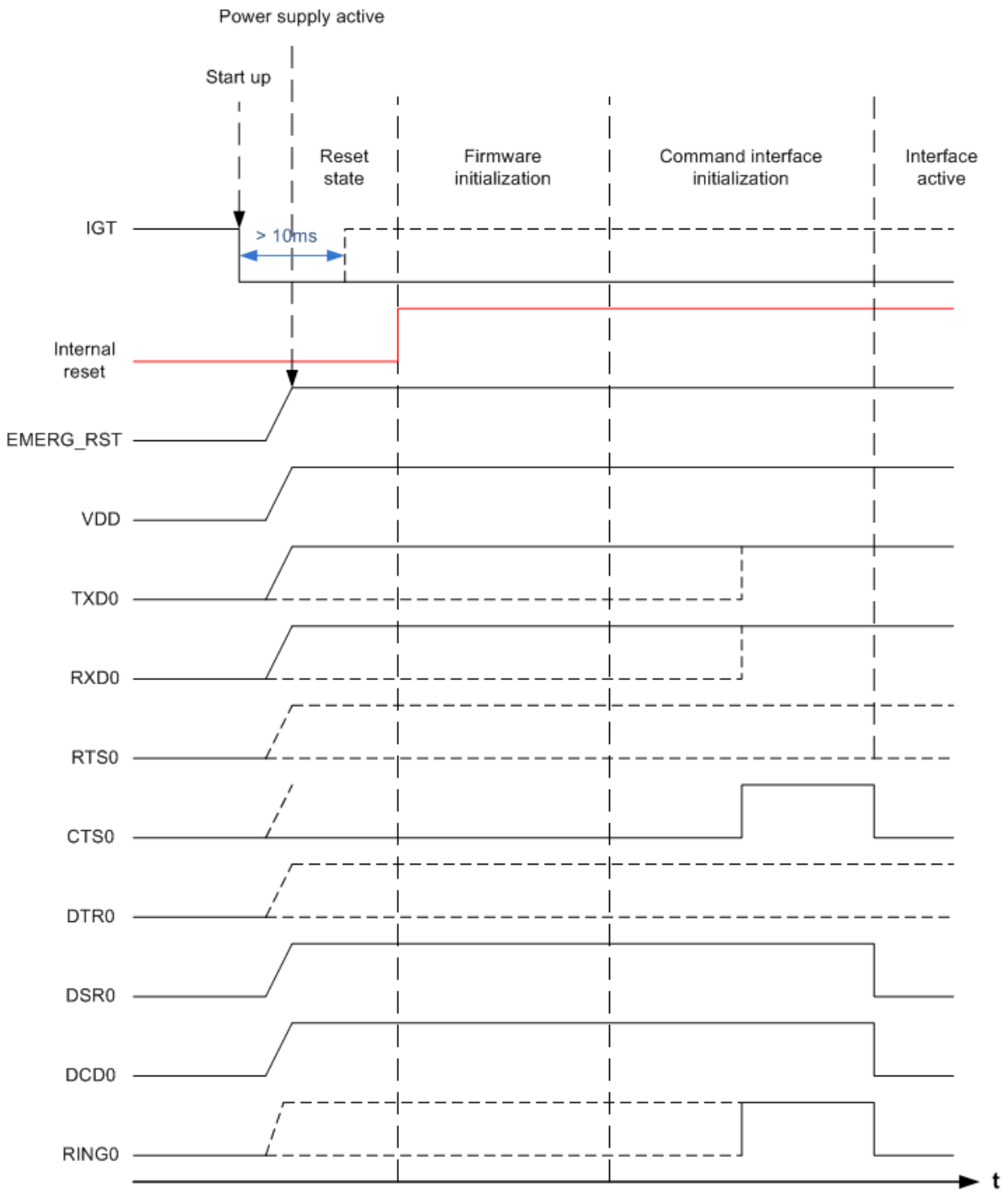

Figure 15: ASC0 startup behavior

Please note that no data must be sent over the ASC0 interface before the interface is active and ready to receive data.

Table 6: DCE-DTE wiring of ASC0

V.24 circuit	DCE		DTE	
	Pin function	Signal direction	Pin function	Signal direction
103	TXD0	Input	TXD	Output
104	RXD0	Output	RXD	Input
105	RTS0	Input	RTS	Output
106	CTS0	Output	CTS	Input
108/2	DTR0	Input	DTR	Output
107	DSR0	Output	DSR	Input
109	DCD0	Output	DCD	Input
125	RING0	Output	RING	Input

The following figure shows the startup behavior of the asynchronous serial interface ASC0.

4.6. Status LED

The STATUS line of the board-to-board connector can be configured to drive a status LED that indicates different operating modes of the module.

To take advantage of this function connect an LED to the STATUS line as shown in Figure 26. The LED can be enabled/disabled by AT command.

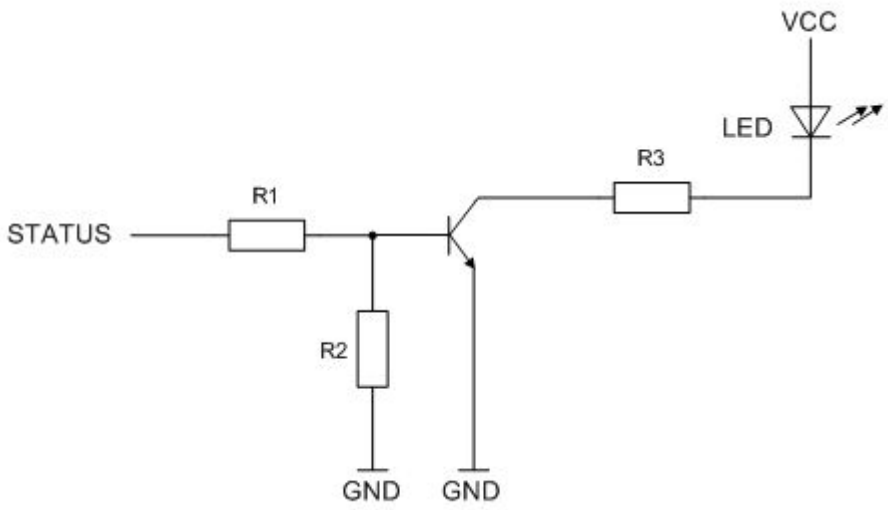

Figure 16: Status signalling with LED driver

4.7. Behavior of the RING0 Line

The RING0 line is available on the first serial interface (ASC0). The signal serves to indicate incoming calls and other types of URCs (Unsolicited Result Code).

Although not mandatory for use in a host application, it is strongly suggested that you connect the RING0 line to an interrupt line of your application. In this case, the application can be designed to receive an interrupt when a falling edge on RING0 occurs. This solution is most effective, particularly, for waking up an application from power saving. Note that if the RING0 line is not wired, the application would be required to permanently poll the data and status lines of the serial interface at the expense of a higher current consumption. Therefore, utilizing the RING0 line provides an option to significantly reduce the overall current consumption of your application.

The behavior of the RING0 line varies with the type of event:

- When a voice/fax/data call comes in the RING0 line goes low for 1s and high for another 4s. Every 5 seconds the ring string is generated and sent over the RXD0 line. If there is a call in progress and call waiting is activated for a connected handset or handsfree device, the RING0 line switches to ground in order to generate acoustic signals that indicate the waiting call.

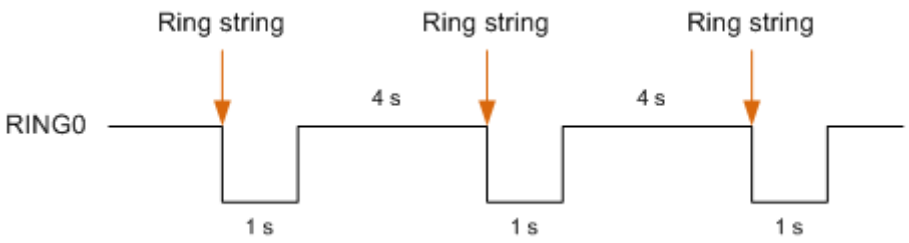

Figure 17: Incoming voice call

- All other types of Unsolicited Result Codes (URCs) also cause the RING0 line to go low, however for 1 second only.

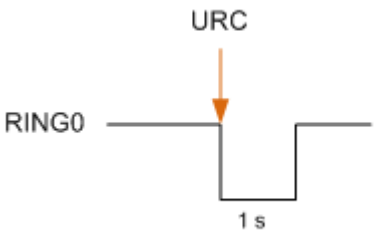

Figure 18: URC transmission

5. Audio Interface

5.1. Analog Audio interface

MG21 has an analog audio interface with a balanced analog microphone input and a balanced analog earpiece output. A supply voltage and an analog ground connection are provided at dedicated pins.

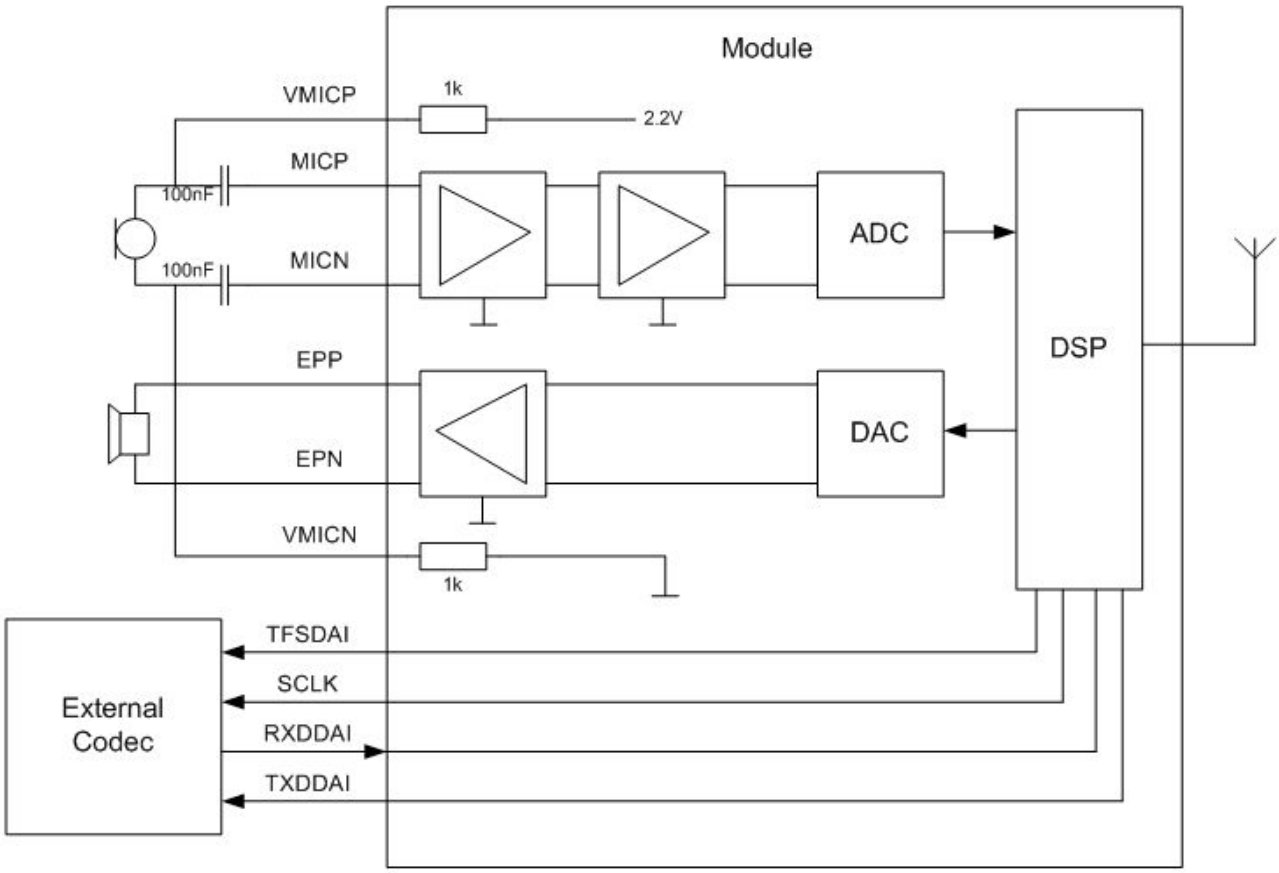

Figure 19: Audio block diagram

MG21 offers six audio modes which can be selected with the AT^SNFS command, no matter which of the three interfaces is currently active. The electrical characteristics of the voiceband part vary with the audio mode. For example, sending and receiving amplification, sidetone paths, noise suppression etc. depend on the selected mode and can be altered with AT commands (except for mode 1).

On the audio interface you can use all audio AT commands. The only exception are the DAC and ADC gain amplifier attenuation <outBbcGain> and <inBbcGain> which cannot be modified when the pulse code modulation interface is used, since in this case the DAC and ADC are switched off.

When shipped from factory, all audio parameters of MG21 are set to interface 1 and audio mode 1. This is the default configuration optimised for the Votronic HH-SI-30.3/V1.1/0 handset and used for type approving the iRZ Wireless Modules reference configuration. Audio mode 1 has fix parameters which cannot be modified. To adjust the settings of the Votronic handset simply change to another audio mode.

In transmit direction, all audio modes contain internal scaling factors (digital amplification) that are not accessible. In case of digital signal input via the DAI, these scaling factors are set to 0dB, so that no further correction using the AT^SNFI parameter <inCalibrate> is required. <in- Calibrate> can be left at its default value (=32767).

5.1.1. Microphone Circuit

The differential microphone inputs MICP and MICN present an impedance of 50kOhm and must be decoupled by capacitors (typical 100nF). A regulated power supply for electret microphones is available at VMICP. The voltage at VMICP is rated at 2.2V and available while audio is active (e.g., during a call). It can also be controlled by AT^SNFM. It is recommended to use an additional RC-filter if a high microphone gain is necessary. It is also recommended to use the VMICN line for grounding the microphone circuit. VMICN provides for the same module ground potential the analog circuits of the module refer to. VMICN must not be connected to the system GND anywhere. Otherwise high GSM burst peak currents will flow across the VMICN line causing GSM humming in the uplink audio signal.

The following figures show possible microphone and line connections.

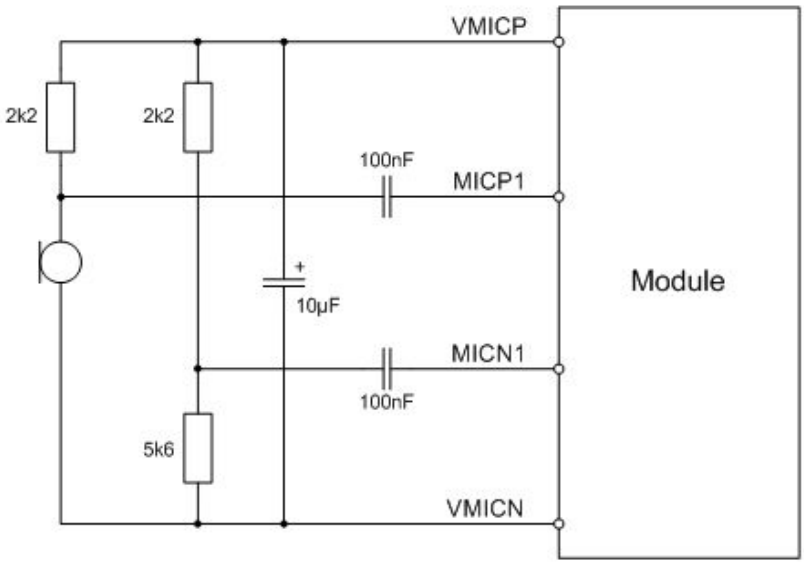

Figure 20: Single ended microphone connection

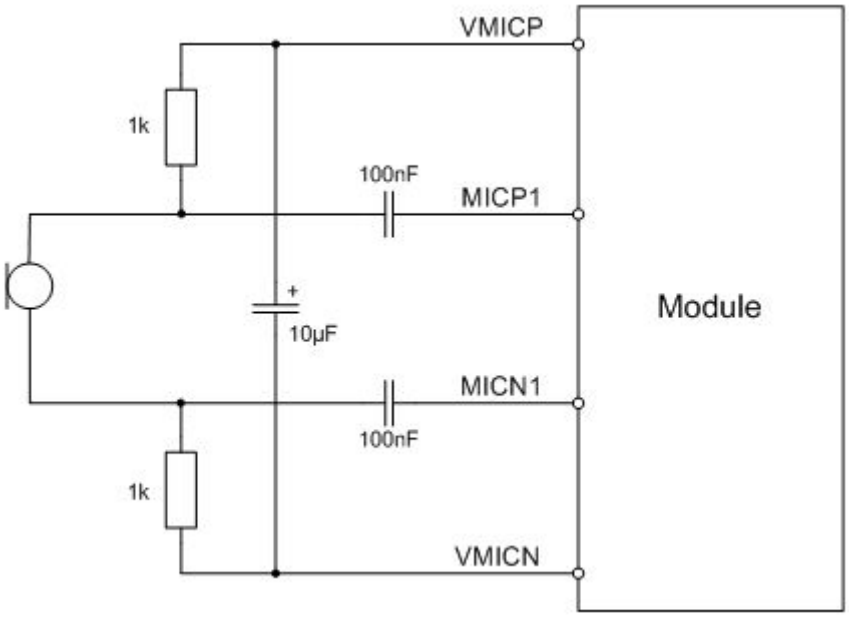

Figure 21: Differential microphone connection

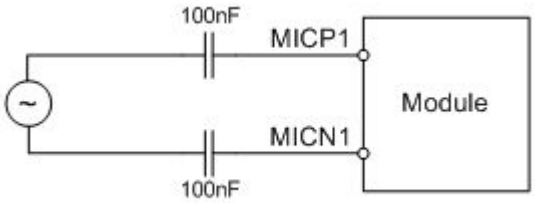

Figure 22: Line input

5.1.2. Loudspeaker Output

MG21 provides a differential loudspeaker output EPP/EPN. The output is able to deliver a voltage of 3.2Vpp at a load resistance of 16Ohm. If it is used as line output, the application should provide a capacitor decoupled differential input to eliminate GSM humming. A single ended connection to a speaker or a line input should not be realized.

The following figures show the typical output configurations.

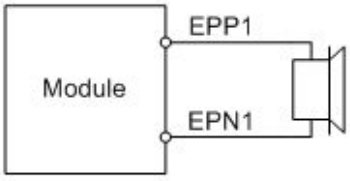

Figure 23: Differential loudspeaker connection

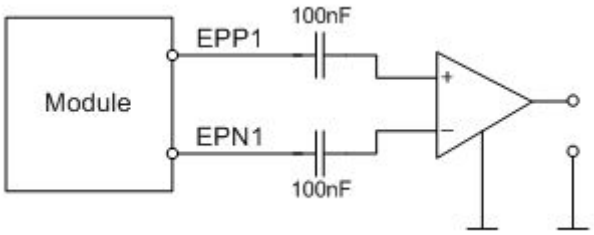

Figure 24: Line output connection

5.2. Digital Audio Interface

MG21's digital audio interface (DAI) can be used to connect audio devices capable of pulse code modulation (PCM). The PCM functionality allows for the use of an external codec like the MC145483. Using the AT^SAIC command you can activate the DAI interface.

The DAI interface supports a 256kHz, long frame synchronization master mode with the following features:

- 16 Bit linear
- 8kHz sample rate
- The most significant bit MSB is transferred first
- 125µs frame duration
- Common frame sync signal for transmit and receive

Table 7 describes the available DAI pins at the digital audio interface.

Table 7: Overview of DAI pins

Signal name on B2B connector	Pin direction	Input/Output
TXDDAI	O	PCM data from MG21 to external codec.
RXDDAI	I	PCM data from external codec to MG21.
TFSDAI	O	Frame synchronization signal to external codec: Long frame @ 256kHz
SCLK	O	Bit clock to external codec: 256kHz
RFSDAI		Reserved for future use

Figure 25 shows the PCM timing for the master mode available with MG21.

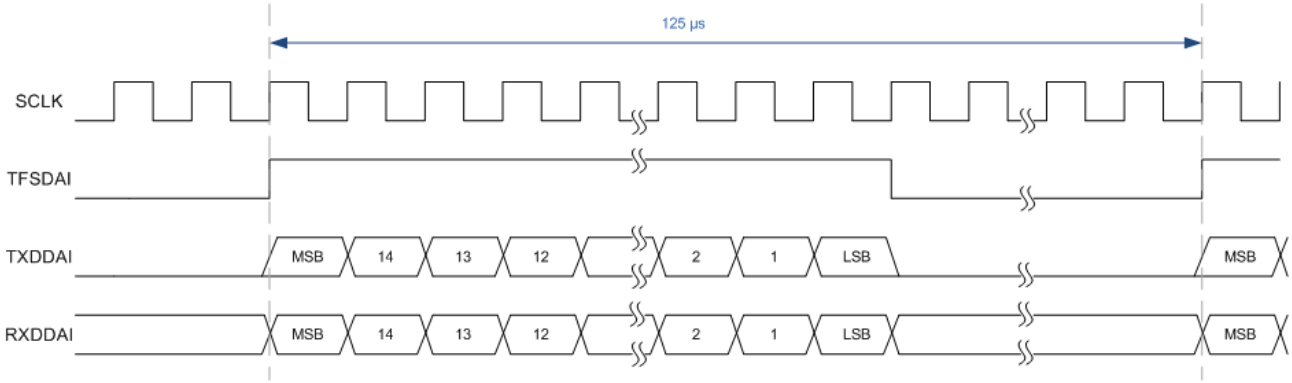

Figure 25: Long frame PCM timing, 256kHz

The following figure shows the start up behaviour of the DAI interface. It is possible to set the startup configuration of the DAI interface via AT command. The start up configuration of functions will be activated after the software initialization of the command interface. With an active state of RING0, CTS0 (low level) the initialization of the DAI interface is finished.

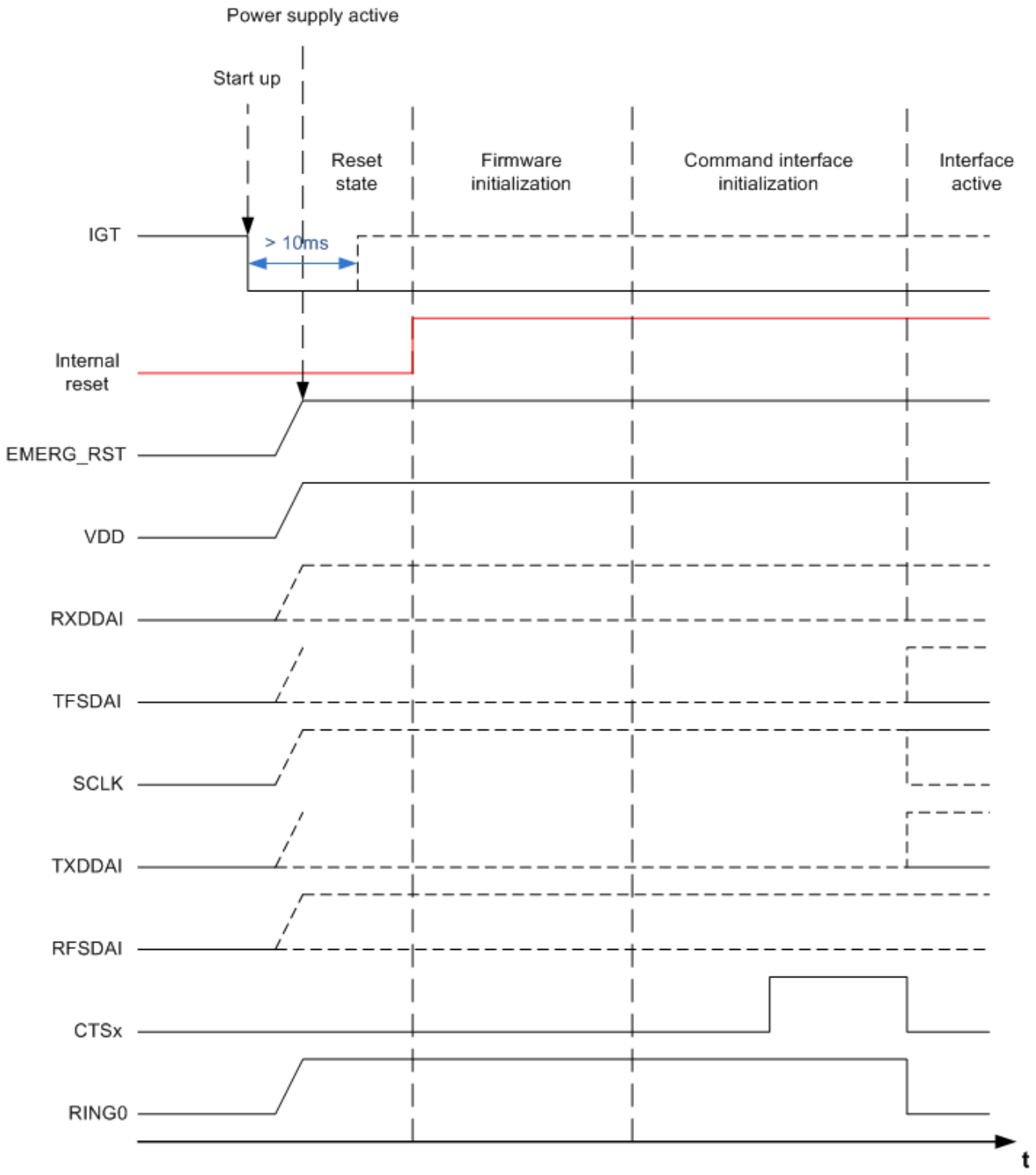

Figure 26: DAI startup timing

5.3. Setting Audio Parameters by AT Commands

The audio modes 2 to 6 can be adjusted according to the parameters listed below. Each audio mode is assigned a separate set of parameters.

Table 8: Audio parameters adjustable by AT command

Parameter	Influence to	Range	Gain range	Calculation
inBbcGain	MICP/MICN analog amplifier gain of baseband controller before ADC	0…7	0…42dB	6dB steps
inCalibrate	Digital attenuation of input signal after ADC	0…32767	-∞...0dB	20 * log (inCalibrate/ 32768)
outBbcGain	EPP/EPN analog output gain of baseband controller after DAC	0…3	0...-18dB	6dB steps
outCalibrate[n] n = 0...4	Digital attenuation of output signal after speech decoder, before summation of sidetone and DAC present for each volume step[n]	0…32767	-∞...+6dB	20 * log (2 * out-Calibrate [n]/32768)
sideTone	Digital attenuation of sidetone is corrected internally by outBbcGain to obtain a constant sidetone independent of output volume	0…32767	-∞...0dB	20 * log (sideTone/ 32768)

Note: The parameters inCalibrate, outCalibrate and sideTone accept also values from 32768 to 65535. These values are internally truncated to 32767.

5.4. Audio Programming Model

The audio programming model shows how the signal path can be influenced by varying the AT command parameters. The model is the same for all three interfaces, except for the parameters <outBbcGain> and <inBbcGain> which cannot be modified if the digital audio interface is being used, since in this case the DAC is switched off.

The parameters <inBbcGain> and <inCalibrate> can be set with AT^SNFI. All the other parameters are adjusted with AT^SNFO and AT^SAIC.

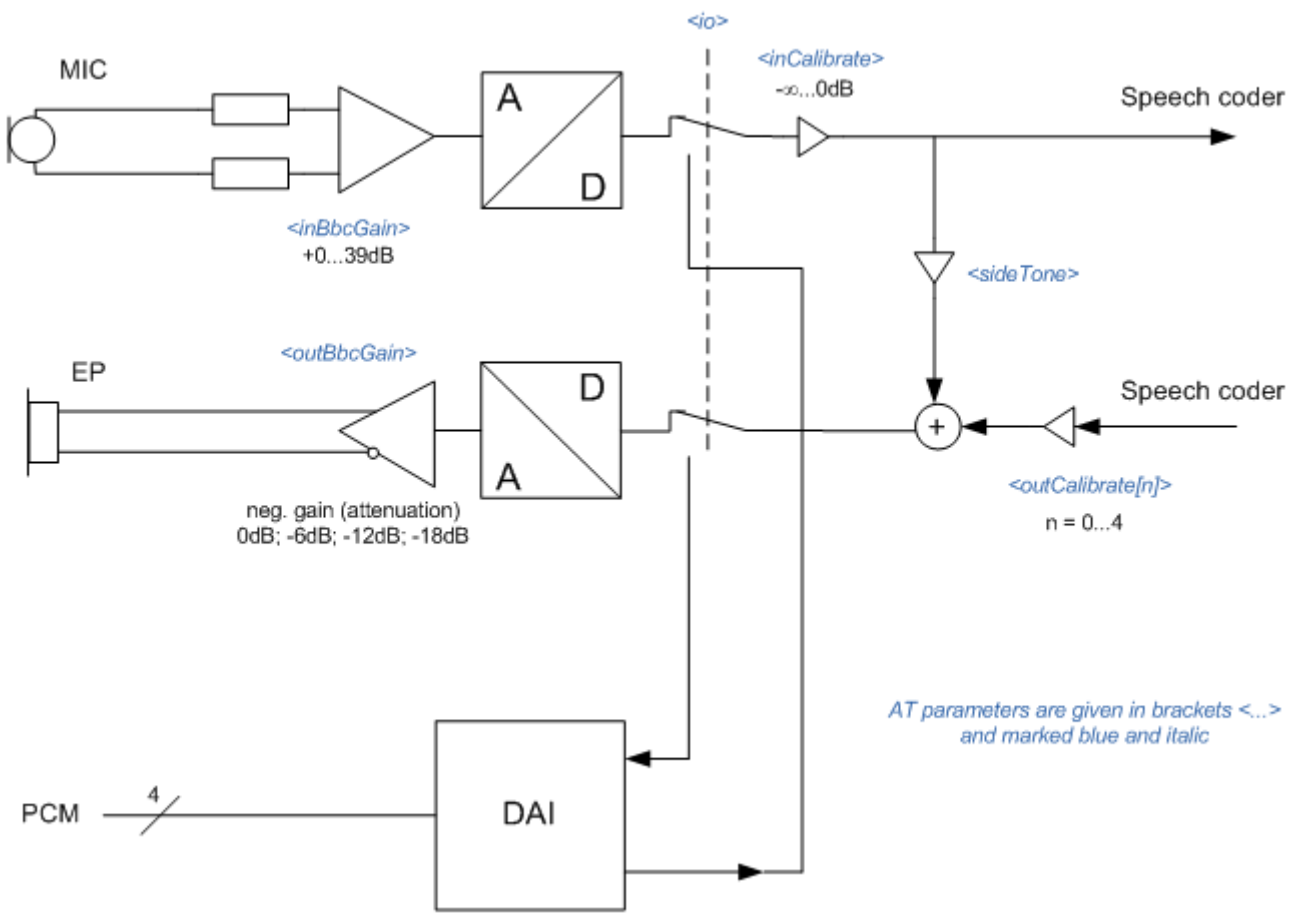

Figure 27: Audio programming model

6. RF Interface

The RF interface has an impedance of 50Ω. MG21 is capable of sustaining a total mismatch at the antenna connector or pad without any damage, even when transmitting at maximum RF power.

The external antenna must be matched properly to achieve best performance regarding radiated power, DC-power consumption and harmonic suppression. Matching networks are not included on the MG21 PCB and should be placed in the host application.

Regarding the return loss MG21 provides the following values:

Table 9: Return loss

State of module	Return loss of module	Recommended return loss of application
Receive	≥ 8dB	≥ 12dB
Transmit	not applicable	≥ 12dB
Idle	≤ 5dB	not applicable

The connection of the antenna or other equipment must be decoupled from DC voltage. This is necessary because the antenna connector is DC coupled to ground via an inductor for ESD protection.

6.1. Antenna Installation

To suit the physical design of individual applications MG21 offers two alternative approaches to connecting the antenna:

- Recommended approach: U.FL antenna connector from Hirose/Molex assembled on the component side of the PCB (top view on MG21).
- Antenna pad and grounding plane placed on the bottom side.

The U.FL connector has been chosen as antenna reference point (ARP) for the iRZ Wireless Modules reference equipment submitted to type approve MG21. All RF data specified throughout this manual are related to the ARP. For compliance with the test results of the iRZ Wireless Modules type approval you are advised to give priority to the connector, rather than using the antenna pad.

Important: Both solutions can only be applied alternatively. This means, whenever an antenna is plugged to the Hirose/Molex connector, the pad must not be used. Vice versa, if the antenna is connected to the pad, then the Hirose/Molex connector must be left empty.

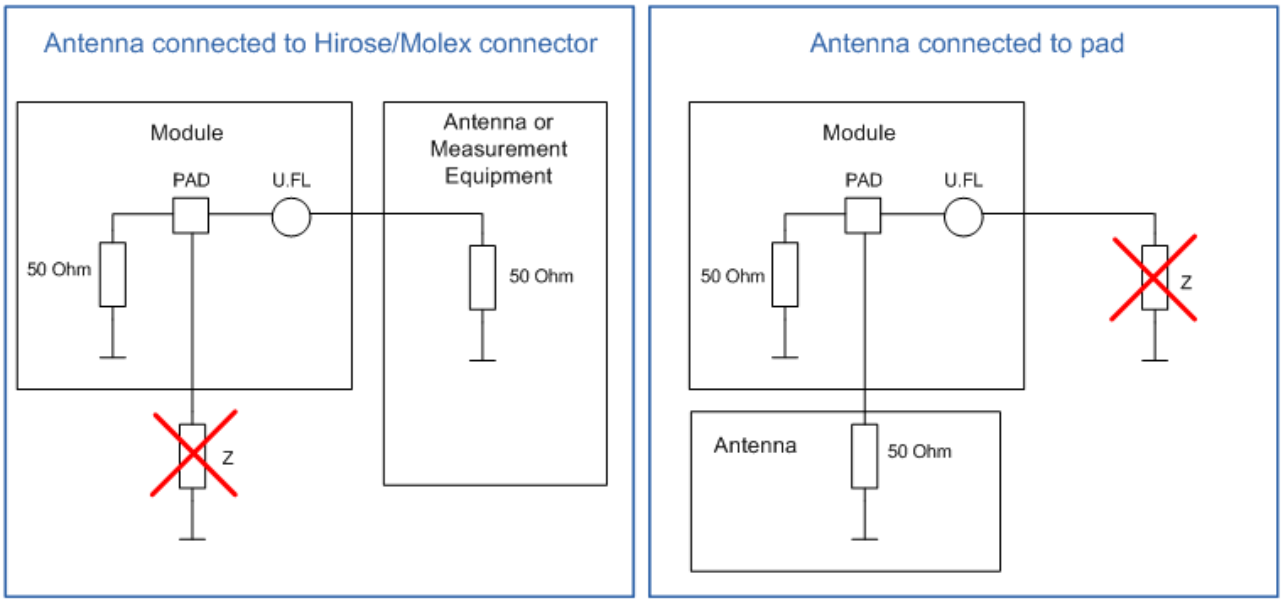

Figure 28: Never use antenna connector and antenna pad at the same time

No matter which option you choose, ensure that the antenna pad does not come into contact with the holding device or any other components of the host application. It needs to be surrounded by a restricted area filled with air, which must also be reserved 0.8 mm in height.

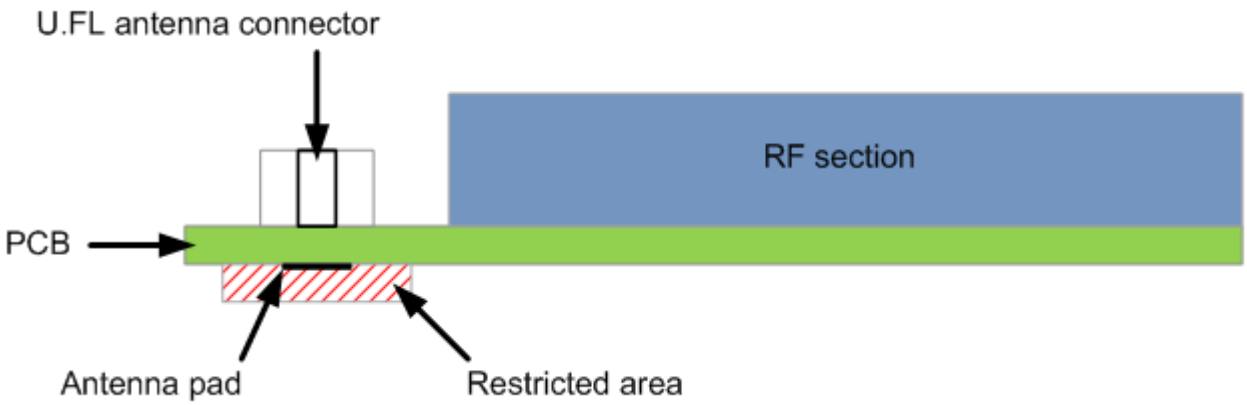

Figure 29: Restricted area around antenna pad

6.1.1. Antenna Pad

The antenna can be soldered to the pad, or attached via contact springs. To help you ground the antenna, MG21 comes with a grounding plane located close to the antenna pad.

When you decide to use the antenna pad take into account that the pad has not been intended as antenna reference point (ARP) for the MG21 type approval. The antenna pad is provided only as an alternative option

which can be used, for example, if the recommended Hirose/Molex connection does not fit into your antenna design.

Also, consider that according to the GSM recommendations TS 45.005 and TS 51.010-01 a 50Ω connector is mandatory for type approval measurements. This requires GSM devices with an integral antenna to be temporarily equipped with a suitable connector or a low loss RF cable with adapter.

To prevent damage to the module and to obtain long-term solder joint properties you are advised to maintain the standards of good engineering practice for soldering.

MG21 material properties:

MG21 PCB:	FR4
Antenna pad:	Gold plated pad

6.1.1.1. Suitable Cable Types

For direct solder attachment, we suggest to use the following cable types:

RG316/U 50Ω coaxial cable

1671A 50Ω coaxial cable

6.2. Antenna Connector

MG21 uses either an ultra-miniature SMT antenna connector from Hirose Ltd: U.FL-R-SMT, or the Molex 07341201 U.FL antenna connector. Both connectors have identical mechanical dimensions. Minor differences in product specifications are mentioned in Table “Material and finish of MG21 antenna connectors and recommended plugs”.

Table 10: Product specifications of MG21 antenna connectors

Item	Specification	Conditions
Ratings		
Nominal impedance	50Ω	Operating temp:-40°C to + 90°C Operating humidity: max. 90%
Rated frequency	DC to 3GHz	
Mechanical characteristics		
Repetitive operation	Contact resistance: Center 25mΩ Outside 15mΩ	30 cycles of insertion and disengagement
Vibration	No momentary disconnections of 1μs. No damage, cracks and looseness of parts.	Frequency of 10 to 100Hz, single amplitude of 1.5mm, acceleration of 59m/s2, for 5 cycles in the direction of each of the 3 axes
Shock	No momentary disconnections of 1μs. No damage, cracks and looseness of parts.	Acceleration of 735m/s2, 11ms duration for 6 cycles in the direction of each of the 3 axes
Environmental characteristics		
Humidity resistance	No damage, cracks and looseness of parts. Insulation resistance: 100MΩ min. at high humidity 500MΩ min. when dry	Exposure to 40°C, humidity of 95% for a total of 96 hours
Temperature cycle	No damage, cracks and looseness of parts. Contact resistance: Center 25mΩ Outside 15mΩ	Temperature: +40°C → 5 to 35°C→ +90°C → 5 to 35°C Time: 30min → within 5min →30min within 5min
Salt spray test	No excessive corrosion	48 hours continuous exposure to 5% salt water

Table 11: Material and finish of MG21 antenna connectors and recommended plugs

Part	Material	Finish
Shell	Phosphor bronze	Hirose: Silver plating Molex: Gold plating
Male center contact	Brass	Gold plating
Female center contact	Phosphor bronze	Gold plating
Insulator	Receptacle: LCP	Hirose: Beige, Molex: Ivory

Mating plugs and cables can be chosen from the Hirose U.FL Series or from other antenna equipment manufacturers like Molex or IMS. Examples from the Hirose U.FL Series are shown below and listed in Table “Ordering information for Hirose U.FL Series”. For latest product information please contact your respective antenna equipment manufacturer.

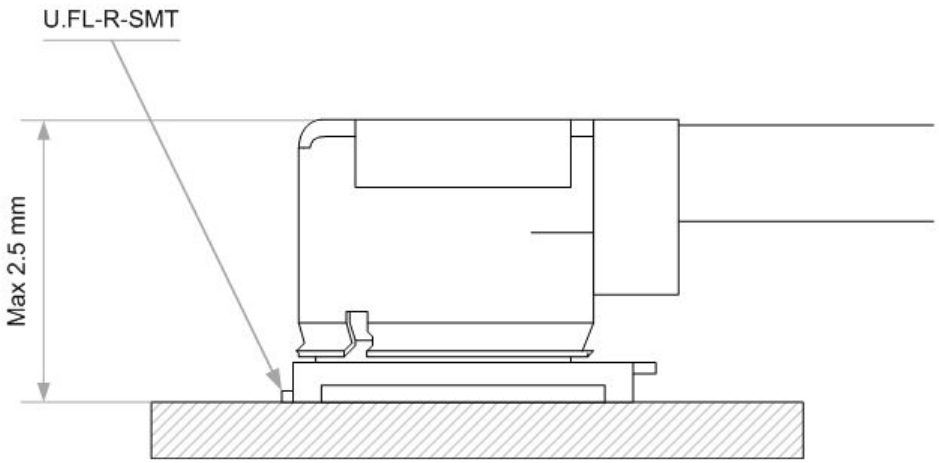

Figure 30: Recommended connector (U.FL-R-SMT)

In addition to the connectors illustrated above, the U.FL-LP-(V)-040(01) version is offered as an extremely space saving solution. This plug is intended for use with extra fine cable (up to Ø 0.81 mm) and minimizes the mating height to 2 mm.

Table 12: Ordering information for Hirose U.FL Series

Item	Part number	HRS number
Connector on MG21	U.FL-R-SMT	CL331-0471-0-10
Right-angle plug shell for Ø 0.81 mm cable	U.FL-LP-040	CL331-0451-2
Right-angle plug for Ø 0.81 mm cable	U.FL-LP(V)-040 (01)	CL331-053-8-01
Right-angle plug for Ø 1.13 mm cable	U.FL-LP-066	CL331-0452-5
Right-angle plug for Ø 1.32 mm cable	U.FL-LP-066	CL331-0452-5
Extraction jig	E.FL-LP-N	CL331-0441-9

Important: We recommend that the unplugged antenna connector with the board connector should not be more than 2.5 mm in height! See recommended antenna connectors above.

7. Electrical, Reliability and Radio Characteristics

7.1. Absolute Maximum Ratings

Absolute maximum ratings for supply voltage and voltages on digital and analog pins of MG21 are listed in Table 13 “Absolute maximum ratings”. Exceeding these values will cause permanent damage to MG21.

Table 13: Absolute maximum ratings

Parameter	Min	Max	Unit
Supply voltage BATT+	-0.3	+6.0	V
Voltage at digital pins in normal operation	-0.3	+3.3	V
Voltage at all digital pins in Power Down mode	-0.3	+0.3	V
Voltage at SIM interface, CCVCC 1.8V in normal Operation	-0.3	+2.2	V
Voltage at SIM interface, CCVCC 2.85V in normal Operation	-0.3	+3.3	V
Voltage at analogue pins in normal operation	-0.3	+3.0	V
Voltage at analogue pins in Power Down mode	-0.3	+0.3	V
VDDLP	-0.3	+2.5	V

7.2. Electrostatic Discharge

The GSM module is not protected against Electrostatic Discharge (ESD) in general. Consequently, it is subject to ESD handling precautions that typically apply to ESD sensitive components. Proper ESD handling and packaging procedures must be applied throughout the processing, handling and operation of any application that incorporates a MG21 module.

Special ESD protection provided on MG21:

- SIM interface: Clamp diodes for protection against overvoltage.
- Antenna port: RF choke to ground.
- The remaining ports of MG21 are not accessible to the user of the final product (since they are installed within the device) and therefore, are only protected according to the “Human Body Model” requirements.

MG21 has been tested according to group standard ETSI EN 301 489-1 (see Table 14) and test standard EN 61000-4-2. The measured values can be gathered from the following table.

Table 14: Measured electrostatic values

Specification / Requirements		Contact discharge	Air discharge
EN 61000-4-2			
SIM interface		± 4kV	± 8kV
Antenna interface		± 4kV	± 8kV
JEDEC JESD22-A114D (Human Body Model, Test conditions: 1.5 kΩ, 100 pF)			
ESD at the module		± 1kV	n.a.

Note: Please note that the values may vary with the individual application design. For example, it matters whether or not the application platform is grounded over external devices like a computer or other equipment, such as the iRZ Wireless Modules.

7.3. Operating Temperatures

Please note that the module's lifetime, i.e., the MTTF (mean time to failure) may be reduced, if operated outside the restriced temperature range. A special URC reports whether the module enters or leaves the restriced temperature range.

Table 15: Board temperature

Parameter	Min	Typ	Max	Unit
Normal operation	**TBD**	+25	**TBD**	°C
Restricted operation	**TBD**		**TBD**	°C
Automatic shutdown1 Temperature measured on MG21 board	**TBD**	---	**TBD**	°C

Table 16: Ambient temperature according to IEC 60068-2 (w/o forced air circulation)

Parameter	Min	Typ	Max	Unit
GSM Call @ max. RF-Power	**TBD**		**TBD**	°C
GPRS Class 8 @ max. RF-Power	**TBD**		**TBD**	°C
GPRS Class 10 @ max. RF-Power (quad band only)	**TBD**		**TBD**	°C

Table 17: Ambient temperature with forced air circulation (air speed 0.9m/s)

Parameter	Min	Typ	Max	Unit
GSM Call @ max. RF-Power	**TBD**		**TBD**	°C
GPRS Class 8 @ max. RF-Power	**TBD**		**TBD**	°C
GPRS Class 10 @ max. RF-Power (quad band only)	**TBD**		**TBD**	°C

Note that within the specified operating temperature ranges the board temperature may vary to a great extent depending on operating mode, used frequency band, radio output power and current supply voltage.

When data are transmitted over GPRS the quad band module variant automatically reverts to a lower Multislot Class if the temperature rises to the limit specified for normal operation and, vice versa, returns to the higher Multislot Class if the temperature is back to normal.

7.4. Storage Conditions

The conditions stated below are only valid for modules in their original packed state in weather protected, non-temperature-controlled storage locations. Normal storage time under these conditions is 12 months maximum.

Table 18: Storage conditions

Type	Condition	Unit	Reference
Air temperature: Low High	 -40 +85	°C	 ETS 300 019-2-1: T1.2, IEC 60068-2-1 Ab ETS 300 019-2-1: T1.2, IEC 60068-2-2 Bb
Humidity relative: Low High Condens.	 10 90 at 30°C 90-100 at 30°C	%	 --- ETS 300 019-2-1: T1.2, IEC 60068-2-56 Cb ETS 300 019-2-1: T1.2, IEC 60068-2-30 Db
Air pressure: Low High	 70 106	kPa	 IEC TR 60271-3-1: 1K4 IEC TR 60271-3-1: 1K4
Movement of surrounding air	1.0	m/s	IEC TR 60271-3-1: 1K4
Water: rain, dripping, icing and frosting	 Not allowed	 ---	 ---
Radiation: Solar Heat	 1120 600	 W/m^2	 ETS 300 019-2-1: T1.2, IEC 60068-2-2 Bb ETS 300 019-2-1: T1.2, IEC 60068-2-2 Bb
Chemically active substances	Not recommended		IEC TR 60271-3-1: 1C1L
Mechanically active substances	Not recommended		IEC TR 60271-3-1: 1S1
Vibration sinusoidal: Displacement Acceleration Frequency range	 1.5 5 2-9 9-200	 mm m/s^2 Hz	IEC TR 60271-3-1: 1M2
Shocks: Shock spectrum Duration Acceleration	 semi-sinusoidal 1 50	 ms m/s^2	IEC 60068-2-27 Ea

7.5. Reliability Characteristics

The test conditions stated below are an extract of the complete test specifications.

Table19: Summary of reliability test conditions

Type of test	Conditions	Standard
Vibration	Frequency range: 10-20 Hz; acceleration: 3.1mm amplitude Frequency range: 20-500 Hz; acceleration: 5g Duration: 2h per axis = 10 cycles; 3 axes	DIN IEC 60068-2-6
Shock half-sinus	Acceleration: 500g Shock duration: 1msec 1 shock per axis 6 positions (± x, y and z)	DIN IEC 60068-2-27
Dry heat	Temperature: +70 ±2°C Test duration: 16 h Humidity in the test chamber: < 50%	EN 60068-2-2 Bb ETS 300019-2-7
Temperature change (shock)	Low temperature: -40°C ±2°C High temperature: +85°C ±2°C Changeover time: < 30s (dual chamber system) Test duration: 1 h Number of repetitions: 100	DIN IEC 60068-2-14 Na ETS 300019-2-7
Damp heat cyclic	High temperature: +55°C ±2°C Low temperature: +25°C ±2°C Humidity: 93% ±3% Number of repetitions: 6 Test duration: 12h + 12h	DIN IEC 60068-2-30 Db ETS 300019-2-5
Cold (constant exposure)	Temperature: -40 ±2°C Test duration: 16 h	DIN IEC 60068-2-1

7.6. Electrical Specifications of the Application Interface

Please note that the reference voltages listed in Table 20 are the values measured directly on the MG21 module. They do not apply to the accessories connected.

If an input pin is specified for $V_{i,h,max}$ = 3.3V, be sure never to exceed the stated voltage. The value 3.3V is an absolute maximum rating.

The Hirose DF12C board-to-board connector on MG21 is a 50-pin double-row receptacle. The names and the positions of the pins can be seen from Figure 31 which shows the top view of MG21.

1	CCCLK	Not connected	50
2	CCVCC	Not connected	49
3	CCIO	EPP	48
4	CCRST	EPN	47
5	CCIN	VMICN	46
6	CCGND	VMICP	45
7	RXDDAI	MICP	44
8	TFSDAI	MICN	43
9	SCLK	GND	42
10	TXDDAI	IGT	41
11	RFSDAI	EMERG_RST	40
12	(ADC)	DCD0	39
13	STATUS	Not connected	38
14	Not connected	CTS0	37
15	RXD0	Not connected	36
16	Not connected	DTR0	35
17	TXD0	RTS0	34
18	VDDLP	DSR0	33
19	Not connected	RING0	32
20	Not connected	VDD	31
21	GND	BATT+	30
22	GND	BATT+	29
23	GND	BATT+	28
24	GND	BATT+	27
25	GND	BATT+	26

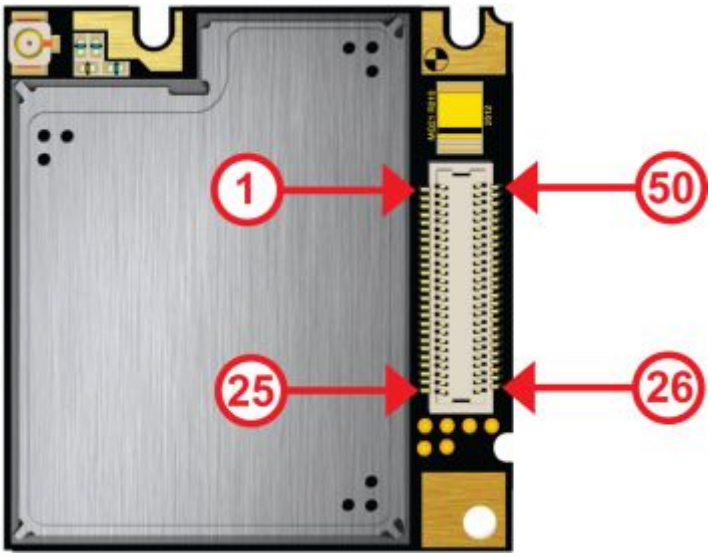

Figure 31: Pin assignment

Table 20: Signal description

Function	Signal name	IO	Signal form and level	Comment
Power supply	BATT+	I	$V_I$max = **TBD** $V_I$norm = 4.2V $V_I$min = **TBD** during Tx burst on board I ≈ **TBD**, during Tx burst (GSM) ~~~ ~~~ ___| |_____| |__ n Tx = n x 577µs peak current every 4.616ms	Pins of BATT+ and GND must be connected in parallel for supply purposes because higher peak currents may occur. Minimum voltage must not fall below **TBD** including drop, ripple, spikes.
	GND		Ground	Application Ground
External supply voltage	VDD	O	$V_O$norm = **TBD** $I_O$max = **TBD** CLmax = 100nF	VDD may be used for application circuits. If unused keep pin open. Not available in Powerdown mode. The external digital logic must not cause any spikes or glitches.
Ignition	IGT	I	R_I ≈ **TBD** V_{IL}max = (BATT+) -1V at I = **TBD** V_{IL}min = 0V at Imax = **TBD** V_{Open}max = **TBD** IGT ~~~ |____| ~~~ Active Low ≥ 10ms	This signal switches the module on. This line must be driven high by an open drain or open collector driver to ground.
Emergency Restart	EMERG_RST	I	RI ≈ **TBD**, CI ≈ **TBD** V_{OH}max = **TBD** V_{IH}min = **TBD** V_{IL}max = **TBD** ~~~~ ~~~~ |___| low impulse width > 10ms	This line must be driven low by an open drain or open collector driver connected to ground. If unused keep pin open.
RTC back up	VDDLP	I/O	RI = **TBD** $V_O$max ≈ **TBD** (output) $V_I$min = **TBD**, $V_I$max = **TBD** (input) $I_I$typ = **TBD** at BATT+ = 0V Mobile in POWER DOWN mode: $V_I$min = **TBD**	If unused keep pin open.
Status	STATUS	O	V_{OL}max = **TBD** at I = **TBD** V_{OH}min = **TBD** at I = **TBD** V_{OH}max = **TBD**	If unused keep pin open.
SIM Card detection	CCIN	I	R_I ≈ **TBD** V_{IH}min = **TBD** at I = **TBD**, V_{IH}max= **TBD** V_{IL}max = **TBD**	CCIN = High, SIM card inserted. CCIN is protected against ESD with a special diode array. If unused keep pin open.

Table 20: Signal description

Function	Signal name	IO	Signal form and level	Comment
3V SIM Card Interface	CCRST	O	V_{OL}max = **TBD** at I = **TBD** V_{OH}min = **TBD** at I = **TBD** V_{OH}max = **TBD**	Maximum cable length or copper track to the SIM card holder should not exceed 100mm.. The signals CCRST, CCIO, CCCLK and CCVCC are protected against ESD with a special diode array.
	CCIO	I/O	V_{IL}max = **TBD** V_{IH}min = **TBD** V_{IH}max = **TBD** V_{OL}max = **TBD** at I = **TBD** V_{OH}min = **TBD** at I = **TBD** V_{OH}max = **TBD**	
	CCCLK	O	V_{OL}max = **TBD** at I = **TBD** V_{OH}min = **TBD** at I = **TBD** V_{OH}max = **TBD**	
	CCVCC	O	$V_O$min = **TBD** $V_O$typ = **TBD** $V_O$max = **TBD** $I_O$max = **TBD**	
	CCGND		Ground	
1.8V SIM Card Interface	CCRST	O	V_{OL}max = **TBD** at I = **TBD** V_{OH}min = **TBD** at I = **TBD** V_{OH}max = **TBD**	
	CCIO	I/O	V_{IL}max = **TBD** V_{IH}min = **TBD** V_{IH}max = **TBD** V_{OL}max = **TBD** at I = **TBD** V_{OH}min = **TBD** at I = **TBD** V_{OH}max = **TBD**	
	CCCLK	O	V_{OL}max = **TBD** at I = **TBD** V_{OH}min = **TBD** at I = **TBD** V_{OH}max = **TBD**	
	CCVCC	O	$V_O$min = **TBD** $V_O$typ = **TBD** $V_O$max = **TBD** $I_O$max = **TBD**	
	CCGND		Ground	

Table 20: Signal description

Function	Signal name	IO	Signal form and level	Comment
Serial Modem Interface ASC0	RXD0	O	V_{OL}max = **TBD** at I = **TBD** V_{OH}min = **TBD** at I = **TBD** V_{OH}max = **TBD** V_{IL}max = **TBD** V_{IH}min = **TBD** V_{IH}max = **TBD**	If unused keep pin open.
	TXD0	I		
	CTS0	O		
	RTS0	I	V_{IL}max = **TBD** at I = **TBD** V_{IH}min = **TBD** at I = **TBD** V_{IH}max = **TBD**	
	DTR0	I		
	RING0	O	V_{OL}max = **TBD** at I = **TBD** V_{OH}min = **TBD** at I = **TBD** V_{OH}max = **TBD**	
	DSR0	O	Open Drain Output R_I ≈ **TBD** (internal Pull up) V_{OL}max = **TBD** at I = **TBD** V_{OH}min = **TBD** at I = **TBD** V_{OH}max = **TBD**	
	DCD0	O	Open Drain Output R_I ≈ **TBD** (internal Pull up) V_{OL}max = **TBD** at I = **TBD** V_{OH}min = **TBD** at I = **TBD** V_{OH}max = **TBD**	
Digital audio interface (PCM)	RXDDAI	I	V_{OL}max = **TBD** at I = **TBD** V_{OH}min = **TBD** at I = **TBD** V_{OH}max = **TBD** V_{IL}max = **TBD** V_{IH}min = **TBD** V_{IH}max = **TBD**	The RFSDAI pin is reserved for future use. If unused keep pin open.
	TFSDAI	O		
	SCLK	O		
	TXDDAI	O		
	RFSDAI			

Table 20: Signal description

Function	Signal name	IO	Signal form and level	Comment
Analog audio interface	VMICP	O	R_I ~ **TBD** $V_O$max = **TBD** $V_O$min = **TBD** at Imax = 300mA connected to VMICN	Microphone supply for customer feeding circuits If unused keep pin open.
	EPP	O	Differential, typ. 3.2Vpp at 16Ω load typ. 4.1Vpp at no load PCM level = +3dBm0, 1.02 kHz sine wave	Balanced output for earphone or balance output for line out If unused keep pin open.
	EPN	O		
	MICP	I	$Z_I$typ = 50kΩ $V_I$max = 0.8Vpp (for 3dBm0 @ 0dB gain)	Balanced differential microphone with external feeding circuit (using VMICP and VMICN) or balanced differential line input. Use coupling capacitors. If unused keep pin open.
	MICN	I		
	VMICN		R_I ~1kOhm analog ground	Ground level for external audio circuits
(ADC)		I	R_I = 1MOhm V_I = 0V … **TBD** (valid range) V_{IH} max = **TBD**	Do not use this pin, keep pin open.

7.7. Power Supply Ratings

Table 21: Power supply ratings

Para-meter	Description	Conditions	Min	Typ	Max	Unit
BATT+	Supply voltage	Voltage must stay within the min/max values, including voltage drop, ripple and spikes.	**TBD**	**TBD**	**TBD**	V
	Voltage drop during transmit burst	Normal condition, power control level for Pout max			**TBD**	mV
	Voltage ripple	Normal condition, power control level for $P_{out\ max}$ @ f<200kHz @ f>200kHz			**TBD**	mV
I_{VDDLP}	OFF state supply current	RTC backup @ BATT+ = 0V		**TBD**		µA
I_{BATT+}		POWER DOWN mode		**TBD**		µA
	Average supply current	SLEEP mode[1] @ DRX = 2 @ DRX = 5 @ DRX = 9		**TBD**		mA
		IDLE mode[1] @ DRX = 2 GSM 850/ EGSM 900 GSM 1800/1900		**TBD**		mA
		TALK mode GSM 850/ EGSM 900[2 3] GSM 1800/1900[4 3]		**TBD**		mA
		DATA mode GPRS,(4 Rx, 1 Tx) GSM 850/ EGSM 900[2 3] GSM 1800/1900[4 3]		**TBD**		mA
		DATA mode GPRS,(3 Rx, 2 Tx) GSM 850/ EGSM 900[2 3] GSM 1800/1900[4 3]		**TBD**		mA
	Peak supply current (during transmission slot every 4.6ms)	Power Control Level[2]		**TBD**		A

1. Measurements start 6 minutes after switching on the module,

Averaging times: SLEEP mode - 3 minutes; IDLE mode - 1.5 minutes,

Communication tester settings: no neighbour cells, no cell reselection etc.

2. Power control level PCL 5

3. Test conditions for the typical values: 50Ω antenna

4. Power control level PCL 0

7.8. Electrical Characteristics of the Voiceband Part

7.8.1. Characteristics of Audio Modes

The electrical characteristics of the voiceband part depend on the current audio mode set with the AT^SNFS command.

Table 22: Voiceband characteristics (typical)

Audio mode no. **AT^SNFS=**	**1** (Default settings, not adjustable)	**2**	**3**	**4**	**5**	**6**
Name	Default Handset	Basic Handsfree	Headset	User Handset	Plain Codec 1	Plain Codec 2
Purpose	DSB with Votronic handset	Car Kit	Headset	DSB with individual handset	Direct access to speech coder	Direct access to speech coder
Gain setting via AT command. Defaults: inBbcGain outBbcGain	Fix 4 (24dB) 0 (0dB)	Adjustable 1 (6dB) 2 (-12dB)	Adjustable 6 (36dB) 2 (-12dB)	Adjustable 4 (24dB) 0 (0dB)	Adjustable 0 (0dB) 0 (0dB)	Adjustable 0 (0dB) 0 (0dB)
Power supply	ON (2.2V)	ON (2.2V)	ON (2.2V)	ON (2.2V)	ON (2.2V)	ON (2.2V)
Sidetone	ON	--	Adjustable	Adjustable	Adjustable	Adjustable
Volume control	OFF	Adjustable	Adjustable	Adjustable	Adjustable	Adjustable
Echo control (send)	Cancella-tion	Cancella-tion	Cancella-tion	Cancella-tion	Cancella-tion	Cancella-tion
Noise suppression[1]	12dB	12dB	12dB	12dB	--	--
MIC input signal for 0dBm0 @ 1024 Hz (default gain)	16mV	130mV	7.5mV[2]	16mV	275mV	275mV
EP output signal in mV rms. @ 0dBm0, 1024 Hz, no load (default gain); @ 3.14 dBm0	500mV	160mV	230mV	500mV	1160mV 4.5Vpp	1160mV 4.5Vpp
Sidetone gain at default settings	20dB	-∞	17dB	20dB	-∞	-∞

1. In audio modes with noise reduction, the microphone input signal for 0dBm0 shall be measured with a sine burst signal for a tone duration of 5 seconds and a pause of 2 sec. The sine signal appears as noise and, after approx. 12 sec, is attenuated by the noise reduction by up to 12dB.

2. Signal for -2dBm0 (due to attenuation of uplink filter at 1kHz)

Note: With regard to acoustic shock, the cellular application must be designed to avoid sending false AT commands that might increase amplification, e.g. for a high sensitive earpiece. A protection circuit should be implemented in the cellular application.

7.8.2. Voiceband Receive Path

Test conditions:

• The values specified below were tested to 1kHz and 0dB gain stage, unless otherwise stated.

• Parameter setup: gs = 0dB means audio mode = 5 for EPP to EPN, inBbcGain= 0, inCalibrate = 32767, outBbcGain = 0, OutCalibrate = 16384, sideTone = 0.

Table 23: Voiceband receive path

Parameter	Min	Typ	Max	Unit	Test condition/remark
Differential output voltage (peak to peak)		**TBD**		Vpp	16Ohm, no load, from EPPx to EPNx gs = 0dB @ 3.14dBm0
Differential output gain settings (*gs*) at 6dB stages (outBbcGain)	**TBD**		**TBD**	dB	Set with AT^SNFO
Fine scaling by DSP (outCalibrate)	**TBD**		**TBD**	dB	Set with AT^SNFO
Output differential DC offset	**TBD**		**TBD**	mV	*gs* = 0dB, outBbcGain = 0 and -6dB
Differential output load resistance	**TBD**			Ω	from EPP to EPN
Allowed single ended load capacitance			**TBD**	pF	from EPP or EPN to VMICN
Absolute gain drift	**TBD**		**TBD**	%	Variation due to change in temperature and life time
Passband ripple			**TBD**	dB	for f < 3600 Hz
Stopband attenuation	**TBD**			dB	for f > 4600 Hz

gs = gain setting

7.8.3. Voiceband Transmit Path

Test conditions:

- The values specified below were tested to 1kHz and 0dB gain stage, unless otherwise stated.
- Parameter setup: Audio mode = 5 for MICP to MICN, inBbcGain= 0, inCalibrate = 32767, outBbcGain = 0, OutCalibrate = 16384, sideTone = 0

Table 24: Voiceband transmit path

Parameter	Min	Typ	Max	Unit	Test condition/remark
Input voltage (peak to peak) MICP to MICN			**TBD**	V	
Input amplifier gain in 6dB steps (inBbcGain)[1]	**TBD**		**TBD**	dB	Set with AT^SNFI
Fine scaling by DSP (inCalibrate)	**TBD**		**TBD**	dB	Set with AT^SNFI
Input impedance MIC		**TBD**		k	
Microphone supply voltage		**TBD**		V	
Microphone supply current			**TBD**	mA	

1. 3dB step between inBbcGain 6 and 7.

7.9. RF Interface Characteristics

Test conditions: All measurements have been performed at T_{amb}= 25°C, $V_{BATT+\ nom}$ = 4.1V.

Table 25: Air Interface

Parameter		Min	Typ	Max	Unit
Frequency range Uplink (MS → BTS)	GSM 850	824		849	MHz
	E-GSM 900	880		915	MHz
	GSM 1800	1710		1785	MHz
	GSM 1900	1850		1910	MHz
Frequency range Downlink (BTS → MS)	GSM 850	869		894	MHz
	E-GSM 900	925		960	MHz
	GSM 1800	1805		1880	MHz
	GSM 1900	1930		1990	MHz
RF power @ ARP with 50Ω load	GSM 850	31	33	35	dBm
	E-GSM 900	31	33	35	dBm
	GSM 1800	28	30	32	dBm
	GSM 1900	28	30	32	dBm
Carrier spacing			200		kHz
Multiplex, Duplex		TDMA / FDMA, FDD			
Time slots per TDMA frame			8		
Frame duration			4.615		ms
Time slot duration			577		µs
Modulation		GMSK			
Receiver input sensitivity @ ARP BER Class II < 2.4% (static input level)	GSM 850	-102	-107		dBm
	E-GSM 900	-102	-107		dBm
	GSM 1800	-102	-107		dBm
	GSM 1900	-102	-107		dBm

1. Power control level PCL 5

2. Power control level PCL 0

3. Under fading conditions

4. Typical value is at least -107dBm

8. Mechanics

The following sections describe the mechanical dimensions of MG21 and give recommendations for integrating MG21 into the host application.

8.1. Mechanical Dimensions of MG21

Figure 32 and Figure 33 shows the top and button view on MG21 and provides an overview of the mechanical dimensions of the board.

Length:	35mm
Width:	32.5mm
Height:	3.1mm (including board-to-board connector), 2.9mm (excluding connector)
Weight:	6g

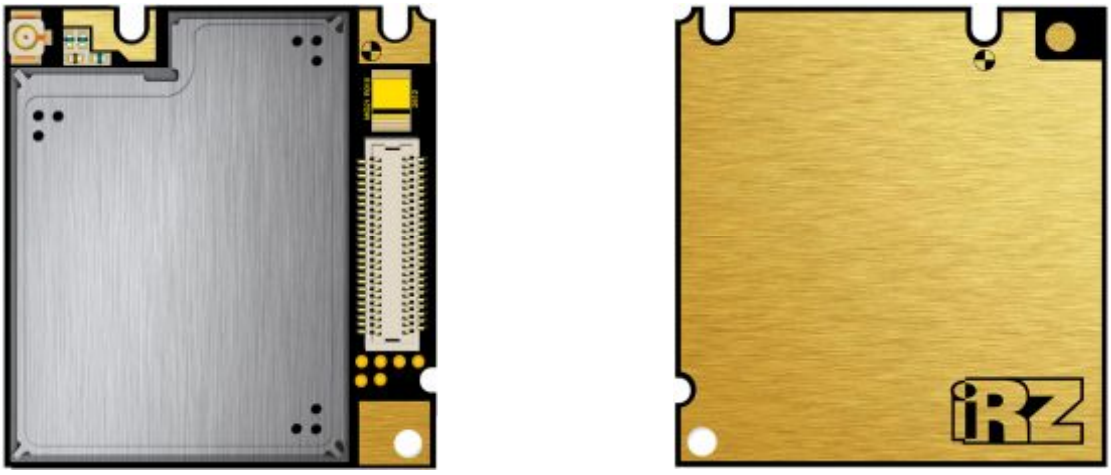

Figure 32: MG21 – top view and bottom view

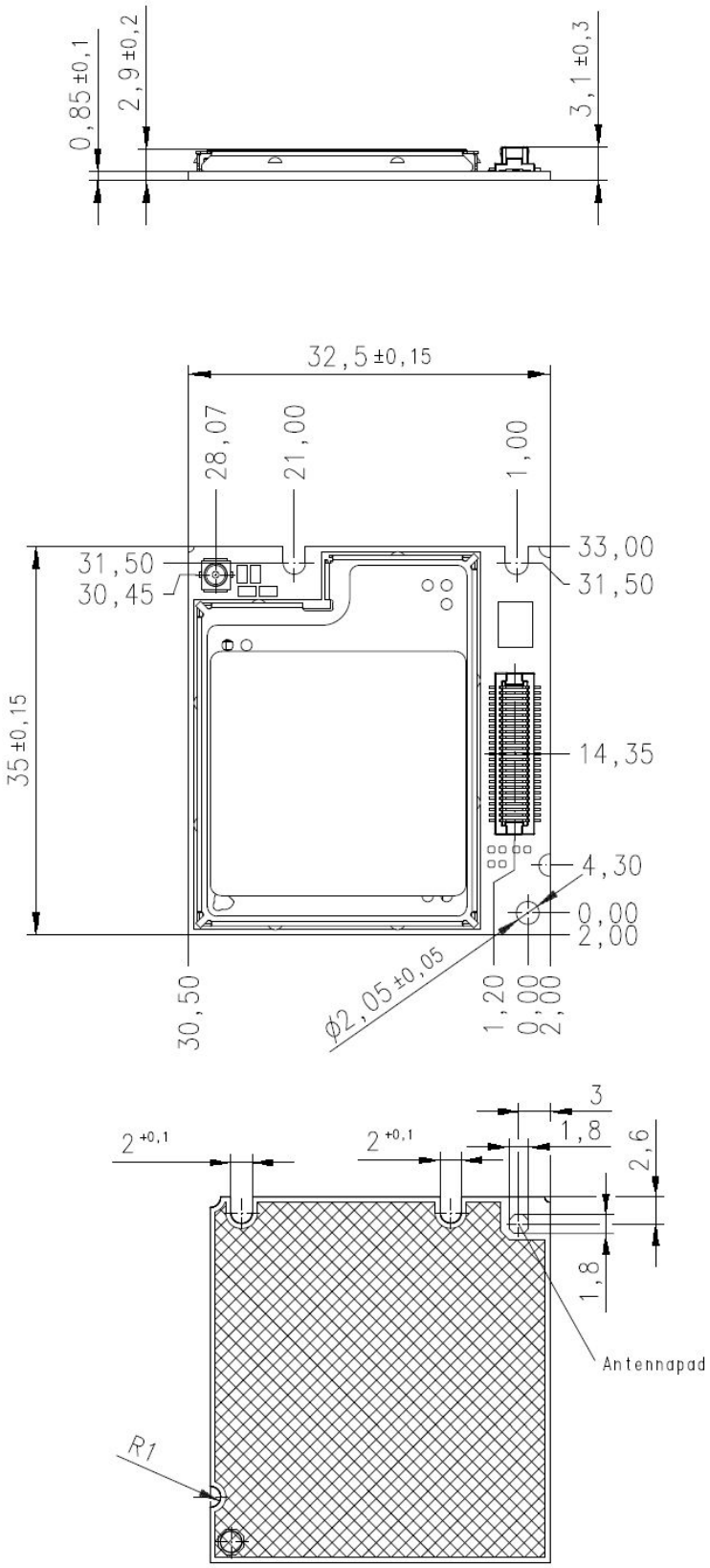

Figure 33: Mechanical dimensions of MG21 (all dimensions in millimeters)

8.2. Mounting MG21 onto the Application Platform

There are many ways to properly install MG21 in the host device. An efficient approach is to mount the MG21 PCB to a frame, plate, rack or chassis.

Fasteners can be M1.6 or M1.8 screws plus suitable washers, circuit board spacers, or customized screws, clamps, or brackets. Screws must be inserted with the screw head on the bottom of the MG21 PCB. In addition, the board-to-board connection can also be utilized to achieve better support. There is also a mounting clip available.

For proper grounding it is strongly recommended to use the ground plane on the back side in addition to the five GND pins of the board-to-board connector. To avoid short circuits ensure that the remaining sections of the MG21 PCB do not come into contact with the host device.

To prevent mechanical damage, be careful not to force, bend or twist the module. Be sure it is positioned flat against the host device.

All the information you need to install an antenna is summarized in Section 6.1. Note that the antenna pad on the bottom of the MG21 PCB must not be influenced by any other PCBs, components or by the housing of the host device. It needs to be surrounded by a restricted space.

8.3. Board-to-Board Connector

This section provides specifications for the 50-pin board-to-board connector which serves as physical interface to the host application. The receptacle assembled on the MG21 PCB is type Hirose DF12C.

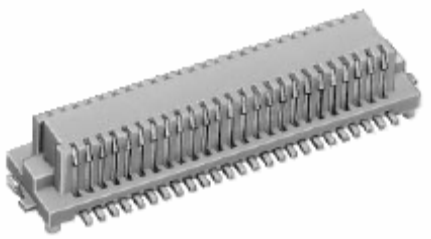

Figure 34: Hirose DF12C receptacle on MG21

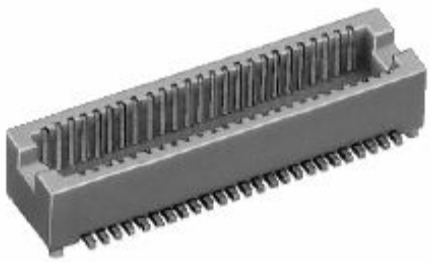

Figure 35: Header Hirose DF12 series

Table 26: Ordering information DF12 series

Item	Part number	Stacking height (mm)	HRS number
Receptacle on MG21	DF12C(3.0)-50DS-0.5V(81)	3 - 5	537-0694-9-81

Table 27: Electrical and mechanical characteristics of the Hirose DF12C connector

Parameter	Specification (50 pin board-to-board connector)
Number of contacts	50
Quantity delivered	2000 connectors per tape & reel
Voltage	50V
Rated current	0.3A max per contact
Resistance	0.05 Ω per contact
Dielectric withstanding voltage	500V RMS min
Operating temperature	-45°C...+125°C
Contact material	phosphor bronze (surface: gold plated)
Insulator material	PA , beige natural
Stacking height	3.0 mm ; 3.5 mm ; 4.0 mm ; 5.0 mm
Insertion force	21.8N
Withdrawal force 1st	10N
Withdrawal force 50th	10N
Maximum connection cycles	50

9. Sample Application

The audio interface demonstrates the balanced connection of microphone and earpiece. This solution is particularly well suited for internal transducers.

If the module is in Power down mode avoid current flowing from any other source into the module circuit, for example reverse current from high state external control lines. Therefore, the controlling application must be designed to prevent reverse flow.

The EMC measures are best practice recommendations. In fact, an adequate EMC strategy for an individual application is very much determined by the overall layout and, especially, the position of components. For example, when connecting cables to the module's interfaces it is strongly recommended to add appropriate ferrite beads for reducing RF radiation.

Disclaimer:

No warranty, either stated or implied, is provided on the sample schematic diagram shown in Figure 36 and the information detailed in this section. As functionality and compliance with national regulations depend to a great amount on the used electronic components and the individual application layout manufacturers are required to ensure adequate design and operating safeguards for their products using MG21 modules.

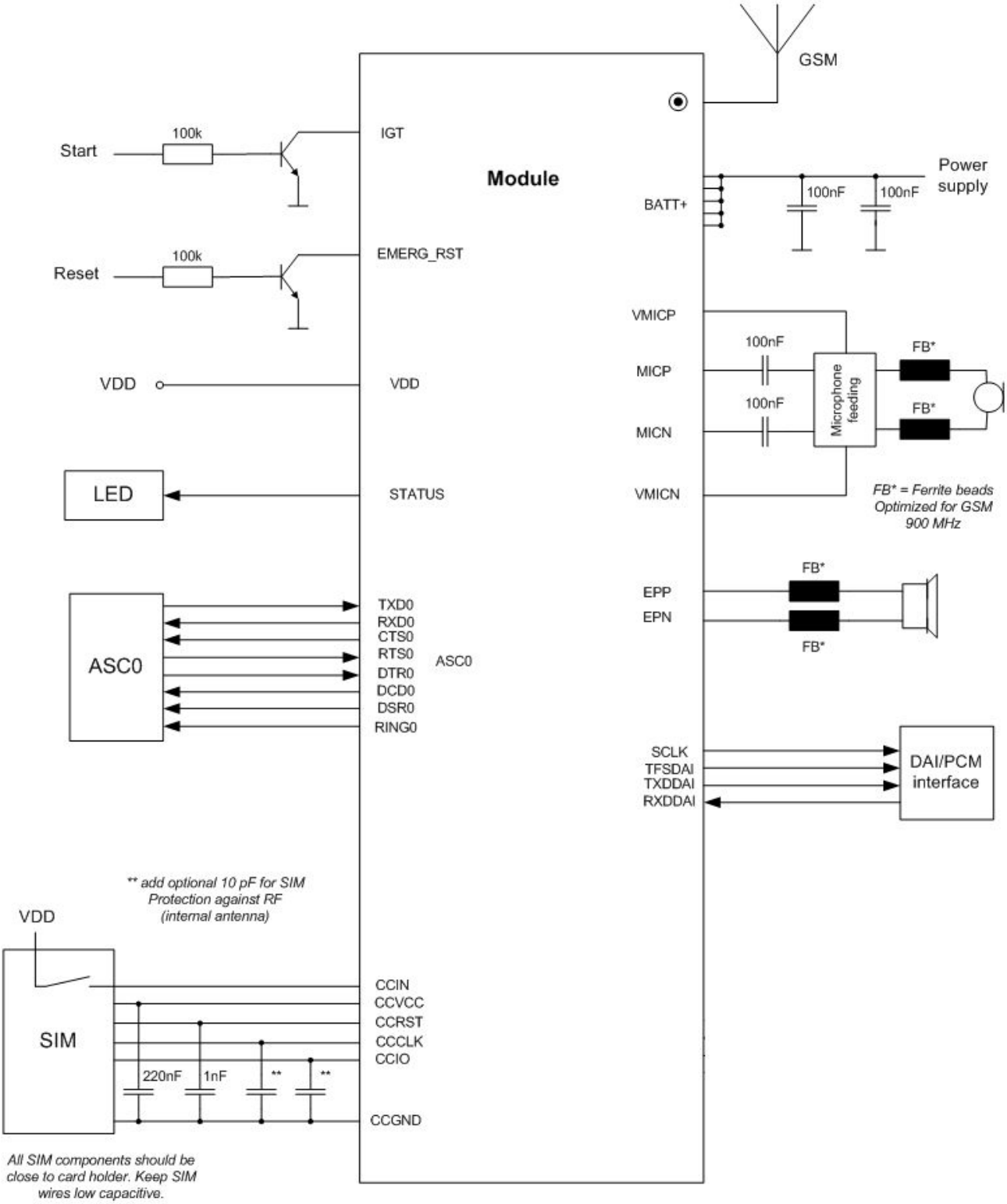

Figure 36: Schematic diagram of MG21 sample application